OM-1500-10 207 748B

January 2003

Processes

MIG (GMAW) Welding
Flux Cored (FCAW) Welding
(Gas- And Self-Shielded)

Description

CV

Wire Feeder

S-74S, S-74D

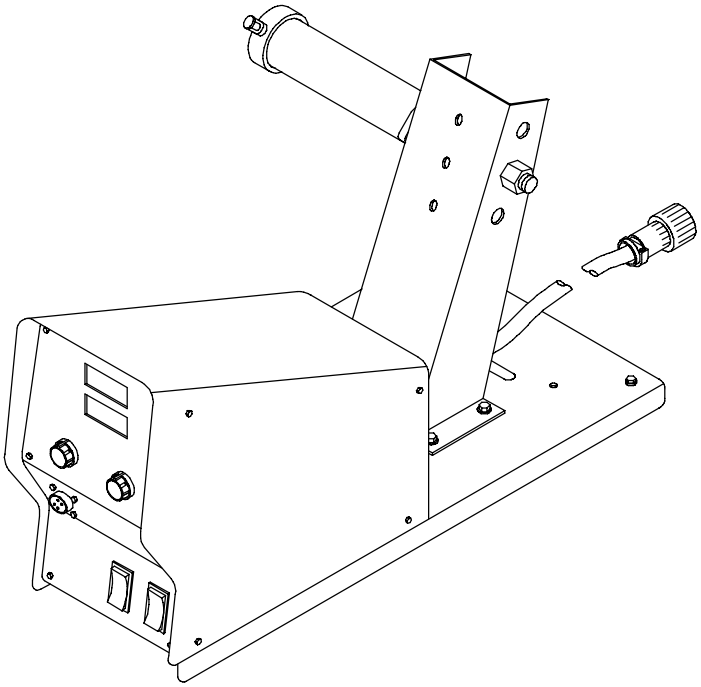

OWNER'S MANUAL

Visit our website at
www.MillerWelds.com

From Miller to You

Thank you and *congratulations* on choosing Miller. Now you can get the job done and get it done right. We know you don't have time to do it any other way.

That's why when Niels Miller first started building arc welders in 1929, he made sure his products offered long-lasting value and superior quality. Like you, his customers couldn't afford anything less. Miller products had to be more than the best they could be. They had to be the best you could buy.

Today, the people that build and sell Miller products continue the tradition. They're just as committed to providing equipment and service that meets the high standards of quality and value established in 1929.

This Owner's Manual is designed to help you get the most out of your Miller products. Please take time to read the Safety precautions. They will help you protect yourself against potential hazards on the worksite. We've made installation and operation quick and easy. With Miller you can count on years of reliable service with proper maintenance. And if for some reason the unit needs repair, there's a Troubleshooting section that will help you figure out what the problem is. The parts list will then help you to decide the exact part you may need to fix the problem. Warranty and service information for your particular model are also provided.

ISO 9001:2000 REGISTERED QUALITY SYSTEM

Miller is the first welding equipment manufacturer in the U.S.A. to be registered to the ISO 9001:2000 Quality System Standard.

Miller Electric manufactures a full line of welders and welding related equipment. For information on other quality Miller products, contact your local Miller distributor to receive the latest full line catalog orindividual catalog sheets. **To locate your nearest distributor or service agency call 1-800-4-A-Miller, or visit us at www.MillerWelds.com on the web.**

TRUE BLUE® WARRANTY

Working as hard as you do – every power source from Miller is backed by the most hassle-free warranty in the business.

Miller offers a Technical Manual which provides more detailed service and parts information for your unit. To obtain a Technical Manual, contact your local distributor. Your distributor can also supply you with Welding Process Manuals such as SMAW, GTAW, GMAW, and GMAW-P.

Miller®

TABLE OF CONTENTS

SECTION 1 – SAFETY PRECAUTIONS - READ BEFORE USING 1
1-1. Symbol Usage 1
1-2. Arc Welding Hazards 1
1-3. Additional Symbols For Installation, Operation, And Maintenance 3
1-4. Principal Safety Standards 3
1-5. EMF Information 4
SECTION 1 – CONSIGNES DE SECURITE – LIRE AVANT UTILISATION 5
1-1. Signification des symboles 5
1-2. Dangers relatifs au soudage à l'arc 5
1-3. Dangers supplémentaires en relation avec l'installation, le fonctionnement et la maintenance 7
1-4. Principales normes de sécurité 8
1-5. Information sur les champs électromagnétiques 8
SECTION 2 – DEFINITIONS 9
2-1. Warning Label Definitions 9
2-2. Rating Label For CE Products 10
2-3. Symbols And Definitions 10
SECTION 3 – INTRODUCTION 11
3-1. Specifications 11
SECTION 4 – INSTALLATION 11
4-1. Site Selection 11
4-2. Rear Panel Connections And Rotating Drive Assembly 12
4-3. 14-Pin Plug Information 13
4-4. Gun Recommendation Table 13
4-5. Wire Type, Size, And Feed Speed Capability Table 13
4-6. Installing And Threading Welding Wire 14
4-7. Setting Internal DIP Switches 15
4-8. Equipment DIP Switch Settings (For Models With Meters Only) 16
SECTION 5 – OPERATION 17
5-1. Power Switch 17
5-2. Jog/Purge 17
5-3. Trigger Hold Switch 18
5-4. Voltage Control And Digital Meters (For Models With Meters Only) 18
SECTION 6 – MAINTENANCE 19
6-1. Routine Maintenance 19
6-2. Diagnostics 20
6-3. Troubleshooting 21
SECTION 7 – ELECTRICAL DIAGRAM 22
SECTION 8 – PARTS LIST 24
OPTIONS AND ACCESSORIES
WARRANTY

⚠ WARNING

This product, when used for welding or cutting, produces fumes or gases which contain chemicals known to the State of California to cause birth defects and, in some cases, cancer. (California Health & Safety Code Section 25249.5 et seq.)

The following terms are used interchangeably throughout this manual:
MIG = GMAW

Declaration of Conformity for European Community (CE) Products

Note ☞ *This information is provided for units with CE certification (see rating label on unit).*

Manufacturer's Name: Miller Electric Mfg. Co.

Manufacturer's Address: 1635 W. Spencer Street
Appleton, WI 54914 USA

Declares that the products: **S-74S, S-74D**

conform to the following Directives and Standards:

Directives

Low Voltage Directive: 73/23/EEC

Electromagnetic Compatibility (EMC) Directive: 89/336/EEC

Machinery Directives: 89/392/EEC, 91/368/EEC, 93/C 133/04, 93/68/EEC

Standards

Arc Welding Equipment Part I: Welding Power Sources: IEC 60974-1
(September 1998 – Second Edition)

Arc Welding Equipment: Wirefeed Systems: IEC 974-5
(September 1997 – Draft Revision)

Degrees of Protection Provided By Enclosures (IP Code): IEC 529
(November 1989 – First Edition)

Insulation Coordination For Equipment With Low-Voltage Systems:
Part I: Principles, Requirements and Tests: IEC 664-1
(October 1992 – First Edition)

Electromagnetic Compatibility, (EMC): EN 50199
(August 1995)

European Contact: Mr. Danilo Fedolfi, Managing Director
ITW WELDING PRODUCTS ITALY S.r.l.
Via Privata Iseo 6/E
20098 San Giuliano
Milanese, Italy

Telephone: 39(02)98290-1
Fax: 39(02)98290-203

SECTION 1 – SAFETY PRECAUTIONS - READ BEFORE USING

1-1. Symbol Usage

Means Warning! Watch Out! There are possible hazards with this procedure! The possible hazards are shown in the adjoining symbols.

▲ **Marks a special safety message.**

☞ *Means "Note"; not safety related.*

This group of symbols means Warning! Watch Out! possible ELECTRIC SHOCK, MOVING PARTS, and HOT PARTS hazards. Consult symbols and related instructions below for necessary actions to avoid the hazards.

1-2. Arc Welding Hazards

▲ **The symbols shown below are used throughout this manual to call attention to and identify possible hazards. When you see the symbol, watch out, and follow the related instructions to avoid the hazard. The safety information given below is only a summary of the more complete safety information found in the Safety Standards listed in Section 1-4. Read and follow all Safety Standards.**

▲ **Only qualified persons should install, operate, maintain, and repair this unit.**

▲ **During operation, keep everybody, especially children, away.**

ELECTRIC SHOCK can kill.

Touching live electrical parts can cause fatal shocks or severe burns. The electrode and work circuit is electrically live whenever the output is on. The input power circuit and machine internal circuits are also live when power is on. In semiautomatic or automatic wire welding, the wire, wire reel, drive roll housing, and all metal parts touching the welding wire are electrically live. Incorrectly installed or improperly grounded equipment is a hazard.

- Do not touch live electrical parts.
- Wear dry, hole-free insulating gloves and body protection.
- Insulate yourself from work and ground using dry insulating mats or covers big enough to prevent any physical contact with the work or ground.
- Do not use AC output in damp areas, if movement is confined, or if there is a danger of falling.
- Use AC output ONLY if required for the welding process.
- If AC output is required, use remote output control if present on unit.
- Disconnect input power or stop engine before installing or servicing this equipment. Lockout/tagout input power according to OSHA 29 CFR 1910.147 (see Safety Standards).
- Properly install and ground this equipment according to its Owner's Manual and national, state, and local codes.
- Always verify the supply ground – check and be sure that input power cord ground wire is properly connected to ground terminal in disconnect box or that cord plug is connected to a properly grounded receptacle outlet.
- When making input connections, attach proper grounding conductor first – double-check connections.
- Frequently inspect input power cord for damage or bare wiring – replace cord immediately if damaged – bare wiring can kill.
- Turn off all equipment when not in use.
- Do not use worn, damaged, undersized, or poorly spliced cables.
- Do not drape cables over your body.
- If earth grounding of the workpiece is required, ground it directly with a separate cable.
- Do not touch electrode if you are in contact with the work, ground, or another electrode from a different machine.
- Use only well-maintained equipment. Repair or replace damaged parts at once. Maintain unit according to manual.
- Wear a safety harness if working above floor level.
- Keep all panels and covers securely in place.
- Clamp work cable with good metal-to-metal contact to workpiece or worktable as near the weld as practical.
- Insulate work clamp when not connected to workpiece to prevent contact with any metal object.
- Do not connect more than one electrode or work cable to any single weld output terminal.

SIGNIFICANT DC VOLTAGE exists after removal of input power on inverters.

- Turn Off inverter, disconnect input power, and discharge input capacitors according to instructions in Maintenance Section before touching any parts.

FUMES AND GASES can be hazardous.

Welding produces fumes and gases. Breathing these fumes and gases can be hazardous to your health.

- Keep your head out of the fumes. Do not breathe the fumes.
- If inside, ventilate the area and/or use exhaust at the arc to remove welding fumes and gases.
- If ventilation is poor, use an approved air-supplied respirator.
- Read the Material Safety Data Sheets (MSDSs) and the manufacturer's instructions for metals, consumables, coatings, cleaners, and degreasers.
- Work in a confined space only if it is well ventilated, or while wearing an air-supplied respirator. Always have a trained watchperson nearby. Welding fumes and gases can displace air and lower the oxygen level causing injury or death. Be sure the breathing air is safe.
- Do not weld in locations near degreasing, cleaning, or spraying operations. The heat and rays of the arc can react with vapors to form highly toxic and irritating gases.
- Do not weld on coated metals, such as galvanized, lead, or cadmium plated steel, unless the coating is removed from the weld area, the area is well ventilated, and if necessary, while wearing an air-supplied respirator. The coatings and any metals containing these elements can give off toxic fumes if welded.

ARC RAYS can burn eyes and skin.

Arc rays from the welding process produce intense visible and invisible (ultraviolet and infrared) rays that can burn eyes and skin. Sparks fly off from the weld.

- Wear a welding helmet fitted with a proper shade of filter to protect your face and eyes when welding or watching (see ANSI Z49.1 and Z87.1 listed in Safety Standards).
- Wear approved safety glasses with side shields under your helmet.
- Use protective screens or barriers to protect others from flash and glare; warn others not to watch the arc.
- Wear protective clothing made from durable, flame-resistant material (leather and wool) and foot protection.

WELDING can cause fire or explosion.

Welding on closed containers, such as tanks, drums, or pipes, can cause them to blow up. Sparks can fly off from the welding arc. The flying sparks, hot workpiece, and hot equipment can cause fires and burns. Accidental contact of electrode to metal objects can cause sparks, explosion, overheating, or fire. Check and be sure the area is safe before doing any welding.

- Protect yourself and others from flying sparks and hot metal.
- Do not weld where flying sparks can strike flammable material.
- Remove all flammables within 35 ft (10.7 m) of the welding arc. If this is not possible, tightly cover them with approved covers.
- Be alert that welding sparks and hot materials from welding can easily go through small cracks and openings to adjacent areas.
- Watch for fire, and keep a fire extinguisher nearby.
- Be aware that welding on a ceiling, floor, bulkhead, or partition can cause fire on the hidden side.
- Do not weld on closed containers such as tanks, drums, or pipes, unless they are properly prepared according to AWS F4.1 (see Safety Standards).
- Connect work cable to the work as close to the welding area as practical to prevent welding current from traveling long, possibly unknown paths and causing electric shock and fire hazards.
- Do not use welder to thaw frozen pipes.
- Remove stick electrode from holder or cut off welding wire at contact tip when not in use.
- Wear oil-free protective garments such as leather gloves, heavy shirt, cuffless trousers, high shoes, and a cap.
- Remove any combustibles, such as a butane lighter or matches, from your person before doing any welding.

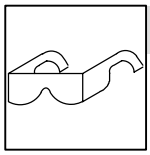

FLYING METAL can injure eyes.

- Welding, chipping, wire brushing, and grinding cause sparks and flying metal. As welds cool, they can throw off slag.
- Wear approved safety glasses with side shields even under your welding helmet.

BUILDUP OF GAS can injure or kill.

- Shut off shielding gas supply when not in use.
- Always ventilate confined spaces or use approved air-supplied respirator.

HOT PARTS can cause severe burns.

- Do not touch hot parts bare handed.
- Allow cooling period before working on gun or torch.

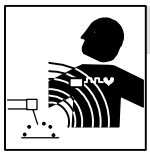

MAGNETIC FIELDS can affect pacemakers.

- Pacemaker wearers keep away.
- Wearers should consult their doctor before going near arc welding, gouging, or spot welding operations.

NOISE can damage hearing.

Noise from some processes or equipment can damage hearing.

- Wear approved ear protection if noise level is high.

CYLINDERS can explode if damaged.

Shielding gas cylinders contain gas under high pressure. If damaged, a cylinder can explode. Since gas cylinders are normally part of the welding process, be sure to treat them carefully.

- Protect compressed gas cylinders from excessive heat, mechanical shocks, slag, open flames, sparks, and arcs.
- Install cylinders in an upright position by securing to a stationary support or cylinder rack to prevent falling or tipping.
- Keep cylinders away from any welding or other electrical circuits.
- Never drape a welding torch over a gas cylinder.
- Never allow a welding electrode to touch any cylinder.
- Never weld on a pressurized cylinder – explosion will result.
- Use only correct shielding gas cylinders, regulators, hoses, and fittings designed for the specific application; maintain them and associated parts in good condition.
- Turn face away from valve outlet when opening cylinder valve.
- Keep protective cap in place over valve except when cylinder is in use or connected for use.
- Read and follow instructions on compressed gas cylinders, associated equipment, and CGA publication P-1 listed in Safety Standards.

1-3. Additional Symbols For Installation, Operation, And Maintenance

FIRE OR EXPLOSION hazard.

- Do not install or place unit on, over, or near combustible surfaces.
- Do not install unit near flammables.
- Do not overload building wiring – be sure power supply system is properly sized, rated, and protected to handle this unit.

FALLING UNIT can cause injury.

- Use lifting eye to lift unit only, NOT running gear, gas cylinders, or any other accessories.
- Use equipment of adequate capacity to lift and support unit.
- If using lift forks to move unit, be sure forks are long enough to extend beyond opposite side of unit.

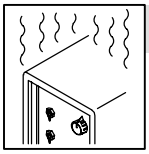

OVERUSE can cause OVERHEATING

- Allow cooling period; follow rated duty cycle.
- Reduce current or reduce duty cycle before starting to weld again.
- Do not block or filter airflow to unit.

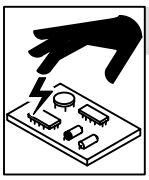

STATIC (ESD) can damage PC boards.

- Put on grounded wrist strap BEFORE handling boards or parts.
- Use proper static-proof bags and boxes to store, move, or ship PC boards.

MOVING PARTS can cause injury.

- Keep away from moving parts.
- Keep away from pinch points such as drive rolls.

WELDING WIRE can cause injury.

- Do not press gun trigger until instructed to do so.
- Do not point gun toward any part of the body, other people, or any metal when threading welding wire.

MOVING PARTS can cause injury.

- Keep away from moving parts such as fans.
- Keep all doors, panels, covers, and guards closed and securely in place.

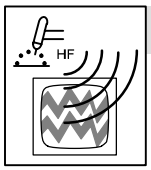

H.F. RADIATION can cause interference.

- High-frequency (H.F.) can interfere with radio navigation, safety services, computers, and communications equipment.
- Have only qualified persons familiar with electronic equipment perform this installation.
- The user is responsible for having a qualified electrician promptly correct any interference problem resulting from the installation.
- If notified by the FCC about interference, stop using the equipment at once.
- Have the installation regularly checked and maintained.
- Keep high-frequency source doors and panels tightly shut, keep spark gaps at correct setting, and use grounding and shielding to minimize the possibility of interference.

ARC WELDING can cause interference.

- Electromagnetic energy can interfere with sensitive electronic equipment such as computers and computer-driven equipment such as robots.
- Be sure all equipment in the welding area is electromagnetically compatible.
- To reduce possible interference, keep weld cables as short as possible, close together, and down low, such as on the floor.
- Locate welding operation 100 meters from any sensitive electronic equipment.
- Be sure this welding machine is installed and grounded according to this manual.
- If interference still occurs, the user must take extra measures such as moving the welding machine, using shielded cables, using line filters, or shielding the work area.

1-4. Principal Safety Standards

Safety in Welding, Cutting, and Allied Processes, ANSI Standard Z49.1, from American Welding Society, 550 N.W. LeJeune Rd, Miami FL 33126 (phone: 305-443-9353, website: www.aws.org).

Recommended Safe Practices for the Preparation for Welding and Cutting of Containers and Piping, American Welding Society Standard AWS F4.1, from American Welding Society, 550 N.W. LeJeune Rd, Miami, FL 33126 (phone: 305-443-9353, website: www.aws.org).

National Electrical Code, NFPA Standard 70, from National Fire Protection Association, P.O. Box 9101, 1 Battery March Park, Quincy, MA 02269–9101 (phone: 617–770–3000, website: www.nfpa.org and www. sparky.org).

Safe Handling of Compressed Gases in Cylinders, CGA Pamphlet P-1, from Compressed Gas Association, 1735 Jefferson Davis Highway, Suite 1004, Arlington, VA 22202–4102 (phone: 703–412–0900, website: www.cganet.com).

Code for Safety in Welding and Cutting, CSA Standard W117.2, from Canadian Standards Association, Standards Sales, 178 Rexdale Boulevard, Rexdale, Ontario, Canada M9W 1R3 (phone: 800–463–6727 or in Toronto 416–747–4044, website: www.csa–international.org).

Practice For Occupational And Educational Eye And Face Protection, ANSI Standard Z87.1, from American National Standards Institute, 11 West 42nd Street, New York, NY 10036–8002 (phone: 212–642–4900, website: www.ansi.org).

Standard for Fire Prevention During Welding, Cutting, and Other Hot Work, NFPA Standard 51B, from National Fire Protection Association, P.O. Box 9101, 1 Battery March Park, Quincy, MA 02269–9101 (phone: 617–770–3000, website: www.nfpa.org and www. sparky.org).

OSHA, Occupational Safety and Health Standards for General Industry, Title 29, Code of Federal Regulations (CFR), Part 1910, Subpart Q, and Part 1926, Subpart J, from U.S. Government Printing Office, Superintendent of Documents, P.O. Box 371954, Pittsburgh, PA 15250 (there are 10 Regional Offices—phone for Region 5, Chicago, is 312–353–2220, website: www.osha.gov).

1-5. EMF Information

Considerations About Welding And The Effects Of Low Frequency Electric And Magnetic Fields

Welding current, as it flows through welding cables, will cause electromagnetic fields. There has been and still is some concern about such fields. However, after examining more than 500 studies spanning 17 years of research, a special blue ribbon committee of the National Research Council concluded that: “The body of evidence, in the committee’s judgment, has not demonstrated that exposure to power-frequency electric and magnetic fields is a human-health hazard.” However, studies are still going forth and evidence continues to be examined. Until the final conclusions of the research are reached, you may wish to minimize your exposure to electromagnetic fields when welding or cutting.

To reduce magnetic fields in the workplace, use the following procedures:

1. Keep cables close together by twisting or taping them.
2. Arrange cables to one side and away from the operator.
3. Do not coil or drape cables around your body.
4. Keep welding power source and cables as far away from operator as practical.
5. Connect work clamp to workpiece as close to the weld as possible.

About Pacemakers:

Pacemaker wearers consult your doctor first. If cleared by your doctor, then following the above procedures is recommended.

SECTION 1 – CONSIGNES DE SÉCURITÉ – À LIRE AVANT UTILISATION

1-1. Signification des symboles

Signifie « Mise en garde. Faire preuve de vigilance. » Cette procédure présente des risques identifiés par les symboles adjacents aux directives.

▲ **Identifie un message de sécurité particulier.**

☞ *Signifie « NOTA » ; n'est pas relatif à la sécurité.*

Ce groupe de symboles signifie « Mise en garde. Faire preuve de vigilance. » Il y a des dangers liés aux CHOCS ÉLECTRIQUES, aux PIÈCES EN MOUVEMENT et aux PIÈCES CHAUDES. Se reporter aux symboles et aux directives ci-dessous afin de connaître les mesures à prendre pour éviter tout danger.

1-2. Dangers relatifs au soudage à l'arc

▲ **Les symboles ci-après sont utilisés tout au long du présent manuel pour attirer l'attention sur les dangers potentiels et les identifier. Lorsqu'on voit un symbole, faire preuve de vigilance et suivre les directives mentionnées afin d'éviter tout danger. Les consignes de sécurité énoncées ci-après ne font que résumer le contenu des normes de sécurité mentionnées à la section 1–4. Lire et respecter toutes ces normes.**

▲ **L'installation, l'utilisation, l'entretien et les réparations ne doivent être confiés qu'à des personnes qualifiées.**

▲ **Pendant l'utilisation de l'appareil, tenir à l'écart toute personne, en particulier les enfants.**

LES DÉCHARGES ÉLECTRIQUES peuvent être mortelles.

Un simple contact avec des pièces sous tension peut causer une électrocution ou des blessures graves. L'électrode et le circuit de soudage sont sous tension dès que l'appareil est en fonctionnement. Le circuit d'entrée et les circuits internes de l'appareil sont également sous tension. En soudage semi–automatique ou automatique, le fil, le dévidoir, le logement des galets d'entraînement et les pièces métalliques en contact avec le fil de soudage sont sous tension. Tout matériel mal installé ou mal mis à la terre présente un danger.

- Ne jamais toucher aux pièces électriques sous tension.
- Porter des gants et des vêtements de protection secs et exempts de trous.
- S'isoler de la pièce et de la terre au moyen de tapis ou autres dispositifs isolants suffisamment grands pour empêcher tout contact physique avec la pièce ou la terre.
- Ne pas se servir d'une source de courant alternatif dans les zones humides, les endroits confinés ou là où on risque de tomber.
- Ne se servir d'une source de courant alternatif QUE si le procédé de soudage l'exige.
- Si l'utilisation d'une source de courant alternatif s'avère nécessaire, se servir de la fonction de télécommande si l'appareil en est équipé.
- Couper l'alimentation ou arrêter le moteur avant de procéder à l'installation, à la réparation ou à l'entretien de l'appareil. Couper/étiqueter l'alimentation selon la norme OSHA 29 CFR 1910.147 (voir les normes de sécurité).
- Installer et mettre à la terre correctement l'appareil conformément à son manuel d'utilisation et aux codes nationaux, provinciaux et municipaux.
- Toujours vérifier la terre du cordon d'alimentation – Vérifier et s'assurer que le fil de terre du cordon d'alimentation est bien raccordé à la borne de terre du sectionneur ou que la fiche du cordon est raccordée à une prise correctement mise à la terre.
- Pour exécuter les branchements d'entrée, fixer d'abord le conducteur de mise à la terre adéquat et contre–vérifier les connexions.
- Vérifier fréquemment le cordon d'alimentation et s'assurer qu'il n'est ni endommagé ni dénudé ; le remplacer immédiatement s'il est endommagé – tout câble dénudé peut causer une électrocution.
- Mettre l'appareil hors tension quand on ne l'utilise pas.
- Ne pas utiliser de câbles usés, endommagés, de calibre insuffisant ou mal épissés.
- Ne pas s'enrouler les câbles autour du corps.
- Si la pièce soudée doit être mise à la terre, le faire directement avec un câble distinct.
- Ne pas toucher l'électrode quand on est en contact avec la pièce, la terre ou une électrode d'une autre machine.
- N'utiliser que du matériel en bon état. Réparer ou remplacer sur–le–champ les pièces endommagées. Entretenir l'appareil conformément au présent manuel.
- Porter un harnais de sécurité quand on travaille en hauteur.
- Maintenir solidement en place tous les panneaux et capots.
- Fixer le câble de retour de façon à obtenir un bon contact métal sur métal avec la pièce à souder ou la table de travail, le plus près possible de la soudure.
- Ne pas connecter plus d'une électrode ou plus d'un câble de masse à un même terminal de sortie.

Il subsiste un COURANT CONTINU IMPORTANT dans les convertisseurs après la suppression de l'alimentation électrique.

- Arrêter les convertisseurs, débrancher le courant électrique et décharger les condensateurs d'alimentation selon les instructions énoncées à la section Entretien avant de toucher les pièces.

LES FUMÉES ET LES GAZ peuvent être dangereux.

Le soudage génère des fumées et des gaz dont l'inhalation peut être dangereuse pour la santé.

- Se tenir à distance des fumées et ne pas les inhaler.
- À l'intérieur, ventiler la zone et/ou utiliser un dispositif d'aspiration au niveau de l'arc pour l'évacuation des fumées et des gaz de soudage.
- Si la ventilation est insuffisante, utiliser un respirateur à adduction d'air agréé.
- Lire les fiches techniques de santé–sécurité (FTSS) et les instructions du fabricant concernant les métaux, les consommables, les revêtements, les nettoyants et les dégraisseurs.
- Ne travailler dans un espace clos que s'il est bien ventilé ou porter un respirateur à adduction d'air. Demander toujours à un surveillant dûment formé de se tenir à proximité. Des fumées et des gaz de soudage peuvent se substituer à l'air, abaisser la teneur en oxygène et causer des lésions ou des accidents mortels. S'assurer que l'air est respirable.
- Ne pas souder à proximité d'opérations de dégraissage, de nettoyage ou de pulvérisation. La chaleur et les rayons de l'arc peuvent réagir en présence de vapeurs et former des gaz hautement toxiques et irritants.
- Ne pas souder de métaux munis d'un revêtement, tels que la tôle d'acier galvanisée, plombée ou cadmiée, à moins que le revêtement n'ait été enlevé dans la zone de soudage, que l'endroit soit bien ventilé, et si nécessaire, porter un respirateur à adduction d'air. Les revêtements et tous les métaux renfermant ces éléments peuvent dégager des fumées toxiques lorsqu'on les soude.

LES RAYONS DE L'ARC peuvent causer des brûlures oculaires et cutanées.

Le rayonnement de l'arc génère des rayons visibles et invisibles intenses (ultraviolets et infrarouges) susceptibles de causer des brûlures oculaires et cutanées. Des étincelles sont projetées pendant le soudage.

- Porter un masque de soudage muni d'un filtre de la nuance adéquate pour se protéger le visage et les yeux pendant le soudage ou pour regarder (voir les normes de sécurité ANSI Z49.1 et Z87.1).
- Porter des lunettes de sécurité à écrans latéraux sous le masque.
- Utiliser des écrans ou des barrières pour protéger les tiers de l'éclat éblouissant ou aveuglant de l'arc ; leur demander de ne pas regarder l'arc.
- Porter des vêtements de protection en matière durable et ignifuge (cuir ou laine) et des chaussures de sécurité.

LE SOUDAGE peut causer un incendie ou une explosion.

Le soudage effectué sur des récipients fermés tels que des réservoirs, des fûts ou des conduites peut causer leur éclatement. Des étincelles peuvent être projetées de l'arc de soudure. La projection d'étincelles, les pièces chaudes et les équipements chauds peuvent causer des incendies et des brûlures. Le contact accidentel de l'électrode avec tout objet métallique peut causer des étincelles, une explosion, un surchauffement ou un incendie. Avant de commencer le soudage, vérifier et s'assurer que l'endroit ne présente pas de danger.

- Se protéger et protéger les tiers de la projection d'étincelles et de métal chaud.
- Ne pas souder à un endroit où des étincelles peuvent tomber sur des substances inflammables.
- Placer toutes les substances inflammables à une distance de 10,7 m de l'arc de soudage. En cas d'impossibilité, les recouvrir soigneusement avec des protections agréées.
- Des étincelles et des matières en fusion peuvent facilement passer même par des fissures et des ouvertures de petites dimensions.
- Surveiller tout déclenchement d'incendie et tenir un extincteur à proximité.
- Le soudage effectué sur un plafond, un plancher, une paroi ou une cloison peut déclencher un incendie de l'autre côté.
- Ne pas souder des récipients fermés tels que des réservoirs, des fûts ou des conduites, à moins qu'ils n'aient été préparés conformément à l'AWS F4.1 (voir les normes de sécurité).
- Brancher le câble sur la pièce le plus près possible de la zone de soudage pour éviter que le courant ne circule sur une longue distance, par des chemins inconnus, et ne cause des risques d'électrocution et d'incendie.
- Ne pas utiliser le poste de soudage pour dégeler des conduites gelées.
- En cas de non utilisation, enlever la baguette d'électrode du porte–électrode ou couper le fil au raz du tube–contact.
- Porter des vêtements de protection exempts d'huile tels que des gants en cuir, une chemise en tissu épais, des pantalons sans revers, des chaussures montantes et un masque.
- Avant de souder, retirer tout produit combustible de ses poches, tel qu'un briquet au butane ou des allumettes.

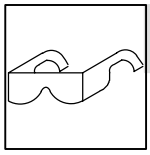

LES PARTICULES PROJETÉES peuvent blesser les yeux.

- Le soudage, le burinage, le passage de la pièce à la brosse métallique et le meulage provoquent l'émission d'étincelles et de particules métalliques. Pendant leur refroidissement, les soudures risquent de projeter du laitier.
- Porter des lunettes de sécurité à écrans latéraux agréés, même sous le masque de soudage.

LES ACCUMULATIONS DE GAZ peuvent causer des blessures ou même la mort.

- Couper l'alimentation en gaz protecteur en cas de non utilisation.
- Veiller toujours à bien ventiler les espaces confinés ou porter un respirateur à adduction d'air agréé.

LES PIÈCES CHAUDES peuvent causer des brûlures graves.

- Ne pas toucher les pièces chaudes à main nue.
- Prévoir une période de refroidissement avant d'utiliser le pistolet ou la torche.

LES CHAMPS MAGNÉTIQUES peuvent perturber le fonctionnement des stimulateurs cardiaques.

- Les personnes qui portent un stimulateur cardiaque doivent se tenir à distance.
- Ils doivent consulter leur médecin avant de s'approcher d'un lieu où on exécute des opérations de soudage à l'arc, de gougeage ou de soudage par points.

LE BRUIT peut affecter l'ouïe.

Le bruit de certains processus et équipements peut affecter l'ouïe.

- Porter des protecteurs d'oreille agréés si le niveau sonore est trop élevé.

Les BOUTEILLES endommagées peuvent exploser.

Les bouteilles de gaz protecteur contiennent du gaz sous haute pression. Toute bouteille endommagée peut exploser. Comme les bouteilles de gaz font normalement partie du procédé de soudage, les manipuler avec précaution.

- Protéger les bouteilles de gaz comprimé de la chaleur excessive, des chocs mécaniques, du laitier, des flammes nues, des étincelles et des arcs.
- Placer les bouteilles debout en les fixant dans un support stationnaire ou dans un porte–bouteilles pour les empêcher de tomber ou de se renverser.
- Tenir les bouteilles éloignées des circuits de soudage ou autres circuits électriques.
- Ne jamais poser une torche de soudage sur une bouteille de gaz.
- Ne jamais mettre une électrode de soudage en contact avec une bouteille de gaz.
- Ne jamais souder une bouteille contenant du gaz sous pression – elle risquerait d'exploser.
- N'utiliser que les bouteilles de gaz protecteur, régulateurs, tuyaux et raccords adéquats pour l'application envisagée ; les maintenir en bon état, ainsi que les pièces connexes.
- Détourner la tête lorsqu'on ouvre la soupape d'une bouteille.
- Laisser le capuchon protecteur sur la soupape, sauf en cas d'utilisation ou de branchement de la bouteille
- Lire et suivre les instructions concernant les bouteilles de gaz comprimé, les équipements associés et les publications P–1 de la CGA, mentionnées dans les normes de sécurité.

1-3. Autres symboles relatifs à l'installation, au fonctionnement et à l'entretien de l'appareil.

Risque D'INCENDIE OU D'EXPLOSION

- Ne pas placer l'appareil sur une surface inflammable, ni au–dessus ou à proximité d'elle.
- Ne pas installer l'appareil à proximité de produits inflammables.
- Ne pas surcharger l'installation électrique – s'assurer que l'alimentation est correctement dimensionnée et protégée avant de mettre l'appareil en service.

LA CHUTE DE L'APPAREIL peut blesser.

- N'utiliser que l'anneau de levage pour lever l'appareil. NE PAS utiliser le chariot, les bouteilles de gaz ou tout autre accessoire.
- Utiliser un engin de capacité adéquate pour lever l'appareil.
- Si on utilise un chariot élévateur pour déplacer l'unité, s'assurer que les fourches sont suffisamment longues pour dépasser du côté opposé de l'appareil.

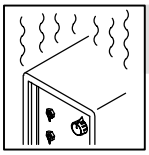

L'EMPLOI EXCESSIF peut FAIRE SURCHAUFFER L'ÉQUIPEMENT.

- Prévoir une période de refroidissement ; respecter le cycle opératoire nominal.
- Réduire le courant ou le cycle opératoire avant de reprendre le soudage.
- Ne pas obstruer les orifices ou filtrer l'alimentation en air du poste.

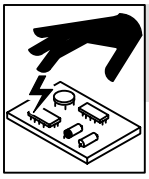

LES CHARGES ÉLECTROSTATIQUES peuvent endommager les circuits imprimés.

- Mettre un bracelet antistatique AVANT de manipuler des cartes ou des pièces.
- Utiliser des pochettes et des boîtes antistatiques pour stocker, déplacer ou expédier des cartes de circuits imprimés.

LES PIÈCES MOBILES peuvent causer des blessures.

- Se tenir à l'écart des pièces mobiles.
- Se tenir à l'écart des points de coincement tels que les dévidoirs.

LES FILS DE SOUDAGE peuvent causer des blessures.

- Ne pas appuyer sur la gâchette avant d'en avoir reçu l'instruction.
- Ne pas diriger le pistolet vers soi, vers d'autres personnes ou vers toute pièce mécanique en engageant le fil de soudage.

LES ORGANES MOBILES peuvent causer des blessures.

- Se tenir à l'écart des organes mobiles comme les ventilateurs.
- Maintenir fermés et bien fixés les portes, panneaux, recouvrements et dispositifs de protection.

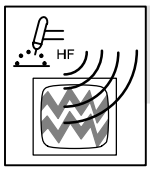

LE RAYONNEMENT HAUTE FRÉQUENCE (H. F.) risque de causer des interférences.

- Le rayonnement haute fréquence peut causer des interférences avec les équipements de radionavigation et de communication, les services de sécurité et les ordinateurs.
- Ne demander qu'à des personnes qualifiées familiarisées avec les équipements électroniques de faire fonctionner l'installation.
- L'utilisateur est tenu de faire corriger rapidement par un électricien qualifié les interférences causées par l'installation.
- Si la Federal Communications Commission signale des interférences, arrêter immédiatement l'appareil.
- Faire régulièrement contrôler et entretenir l'installation.
- Maintenir soigneusement fermés les panneaux et les portes des sources de haute fréquence, maintenir le jeu d'éclatement au réglage adéquat et utiliser une terre et un blindage pour réduire les interférences éventuelles.

LE SOUDAGE À L'ARC peut causer des interférences.

- L'énergie électromagnétique peut causer des interférences avec l'équipement électronique sensible tel que les ordinateurs et l'équipement commandé par ordinateur tel que les robots.
- Veiller à ce que tout l'équipement de la zone de soudage soit compatible au point de vue électromagnétique.
- Pour réduire la possibilité d'interférence, maintenir les câbles de soudage aussi courts que possible, les grouper, et les poser aussi bas que possible (par ex. : à terre).
- Veiller à souder à une distance de 100 mètres de tout équipement électronique sensible.
- Veiller à ce que le poste de soudage soit posé et mis à la terre conformément au présent manuel.
- En cas d'interférences après exécution des directives précédentes, il incombe à l'utilisateur de prendre des mesures supplémentaires telles que le déplacement du poste, l'utilisation de câbles blindés, l'utilisation de filtres de ligne ou la pose de protecteurs dans la zone de travail.

LES CHAMPS MAGNÉTIQUES peuvent affecter les stimulateurs cardiaques.

- Porteurs de stimulateur cardiaque, restez à distance.
- Les porteurs d'un stimulateur cardiaque doivent d'abord consulter leur médecin avant de s'approcher des opérations de soudage à l'arc, de gougeage ou de soudage par points.

1-4. Principales normes de sécurité

Safety in Welding, Cutting, and Allied Processes, norme ANSI Z49.1, de l'American Welding Society, 550 N.W. LeJeune Rd, Miami FL 33126 (téléphone : (305) 443–9353, site Web : www.aws.org).

Recommended Safe Practices for the Preparation for Welding and Cutting of Containers and Piping, norme American Welding Society AWS F4.1, de l'American Welding Society, 550 N.W. LeJeune Rd, Miami, FL 33126 (téléphone : (305) 443–9353, site Web : www.aws.org).

National Electrical Code, norme NFPA 70, de la National Fire Protection Association, P.O. Box 9101, 1 Battery March Park, Quincy, MA 02269–9101 (téléphone : (617) 770–3000, sites Web : www.nfpa.org et www.sparky.org).

Safe Handling of Compressed Gases in Cylinders, brochure CGA P–1, de la Compressed Gas Association, 1735 Jefferson Davis Highway, Suite 1004, Arlington, VA 22202–4102 (téléphone : (703) 412–0900, site Web : www.cganet.com).

Code for Safety in Welding and Cutting, norme CSA W117.2, de la Canadian Standards Association, Standards Sales, 178 boulevard Rexdale, Rexdale (Ontario) Canada M9W 1R3 (téléphone : (800) 463–6727 ou à Toronto : (416) 747–4044, site Web : www.csa–international.org).

Practice For Occupational And Educational Eye And Face Protection, norme ANSI Z87.1, de l'American National Standards Institute, 11 West 42nd Street, New York, NY 10036–8002 (téléphone : (212) 642–4900, site Web : www.ansi.org).

Standard for Fire Prevention During Welding, Cutting, and Other Hot Work, norme NFPA 51B, de la National Fire Protection Association, P.O. Box 9101, 1 Battery March Park, Quincy, MA 02269–9101 (téléphone : (617) 770–3000, site Web : www.nfpa.org et www.sparky.org).

OSHA, Occupational Safety and Health Standards for General Industry, Title 29, Code of Federal Regulations (CFR), Part 1910, Subpart Q, and Part 1926, Subpart J, de l'U.S. Government Printing Office, Superintendent of Documents, P.O. Box 371954, Pittsburgh, PA 15250 (il y a 10 bureaux régionaux – Téléphone pour la Région 5, Chicago : (312) 353–2220, site Web : www.osha.gov).

1-5. Information sur les champs électromagnétiques

Données sur le soudage électrique et les effets des champs magnétiques basse fréquence sur l'organisme

En parcourant les câbles de soudage, le courant crée des champs électromagnétiques. Les effets potentiels de tels champs restent préoccupants. Cependant, après avoir examiné plus de 500 études qui ont été faites pendant une période de recherche de 17 ans, un comité de spécialistes du National Research Council a conclu : « L'accumulation de preuves n'a pas démontré que l'exposition aux champs magnétiques et aux champs électriques à haute fréquence constitue un risque pour la santé humaine ». Toutefois, les études et l'examen des preuves se poursuivent. En attendant les conclusions finales de la recherche, il serait souhaitable de réduire l'exposition aux champs électromagnétiques pendant le soudage ou le coupage.

Afin de réduire les champs électromagnétiques en milieu de travail, respecter les consignes suivantes :

1. Garder les câbles ensemble en les torsadant ou en les fixant avec du ruban adhésif.
2. Mettre tous les câbles du côté opposé à l'opérateur.
3. Ne pas s'enrouler les câbles autour du corps.
4. Garder le poste de soudage et les câbles le plus loin possible de soi.
5. Placer la pince de masse le plus près possible de la zone de soudage.

Consignes relatives aux stimulateurs cardiaques :

Les personnes qui portent un stimulateur cardiaque doivent avant tout consulter leur médecin. Si ce dernier les déclare aptes, il leur est recommandé de respecter les consignes ci-dessus.

2-1. Warning Label Definitions

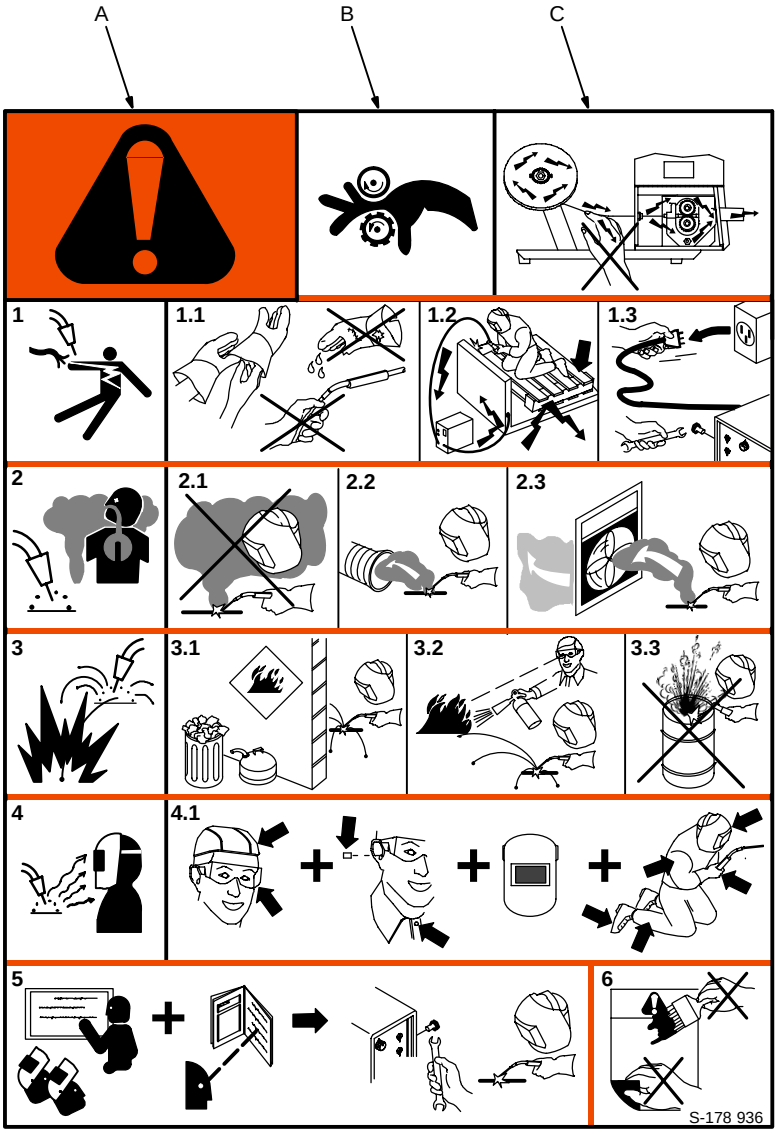

A. Warning! Watch Out! There are possible hazards as shown by the symbols.

B. Drive rolls can injure fingers.

C. Welding wire and drive parts are at welding voltage during operation – keep hands and metal objects clear.

1 Electric shock can kill.

1.1 Wear dry insulating gloves. Do not touch electrode with bare hand. Do not wear wet or damaged gloves.

1.2 Protect yourself from electric shock by insulating yourself from work and ground.

1.3 Disconnect input plug or power before working on machine.

2 Breathing welding fumes can be hazardous to your health.

2.1 Keep your head out of the fumes.

2.2 Use forced ventilation or local exhaust to remove the fumes.

2.3 Use ventilating fan to remove fumes.

3 Welding sparks can cause explosion or fire.

3.1 Keep flammables away from welding. Don't weld near flammables.

3.2 Welding sparks can cause fires. Have a fire extinguisher nearby and have a watch person ready to use it.

3.3 Do not weld on drums or any closed containers.

4 Arc rays can burn eyes and injure skin.

4.1 Wear hat and safety glasses. Use ear protection and button shirt collar. Use welding helmet with correct shade of filter. Wear complete body protection.

5 Become trained and read the instructions before working on the machine or welding.

6 Do not remove or paint over (cover) the label.

2-2. Rating Label For CE Products

For label location see Section 4-2.

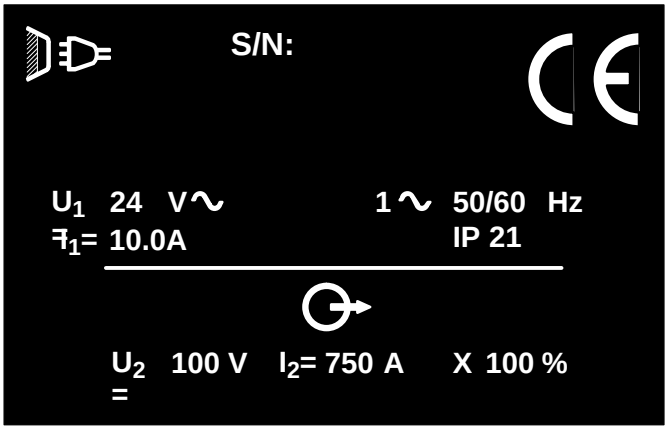

ST-178 794-A

2-3. Symbols And Definitions

Note *Some symbols are found only on CE products.*

A	Amperes	V	Volts	∿	Alternating Current	X	Duty Cycle
IP	Degree Of Protection	Hz	Hertz		Program		Wire Feed
	Jog		Output		Trigger		Line Connection
	Set Up		Sequence		Trigger Hold On		Trigger Hold Off
	Purge		Press To Set		Start		Crater
t	Time	t1	Preflow Time	t2	Postflow Time		Read Instructions
	Increase	I_1	Primary Current	I_2	Rated Current	U_2	Load Voltage
U_1	Primary Voltage	A B	Dual Schedule				

SECTION 3 – INTRODUCTION

3-1. Specifications

Type of Input Power	Welding Power Source Type	Wire Feed Speed Range	Wire Diameter Range	Welding Circuit Rating	IP Rating	Overall Dimensions	Weight
24 Volts AC Single-Phase 10 Amperes 50/60 Hertz	Constant Voltage (CV) DC With 14-Pin And Contactor Control	Standard: 50 To 780 ipm (1.3 To 19.8 mpm) Optional High Speed: 92 To 1435 ipm (2.3 To 36.4 mpm)	.023 To 1/8 in (0.6 To 3.2 mm) Max Spool Weight: 60 lb (27 kg)	100 Volts, 750 Amperes, 100% Duty Cycle	IP 21	Length: 27 in (686 mm) Width: 12-1/2 in (318 mm) Height: 14 in (356 mm)	45 lb (20.41 kg)

SECTION 4 – INSTALLATION

4-1. Site Selection

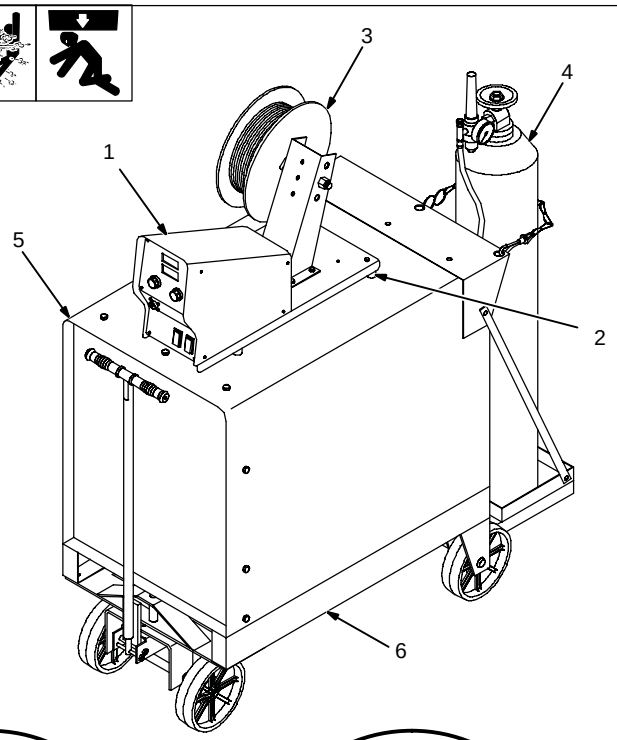

▲ **Do not put feeder where welding wire hits cylinder.**

▲ **Do not move or operate equipment when it could tip.**

1 Wire Feeder

2 Rubber Feet

Choose slot that allows all rubber feet to sit securely on top of welding power source.

3 Wire Spool/Reel

4 Gas Cylinder w/Hose And Regulator (Customer Supplied)

5 Welding Power Source

6 Running Gear

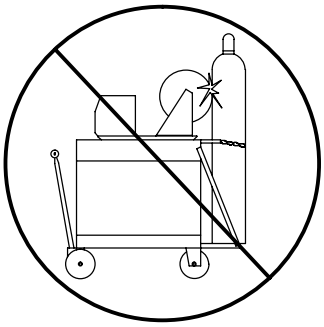

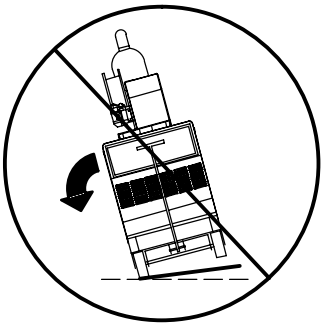

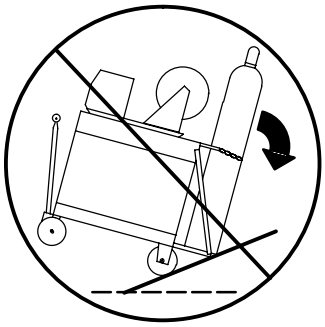

Wire feeder shown is representative only and does not reflect actual unit.

802 806-A

4-2. Rear Panel Connections And Rotating Drive Assembly

1 14-Pin Control Cable - 10 Ft

2 Shielding Gas Valve Fitting

Connect customer-supplied gas hose with 5/8-18 right-hand threads.

3 Weld Cable Terminal

4 Weld Cable

5 Drive Assembly

6 Drive Assembly Rotation Knob

7 Rating Label Location

To rotate the drive assembly, loosen drive assembly rotation knob, rotate drive assembly, and tighten knob.

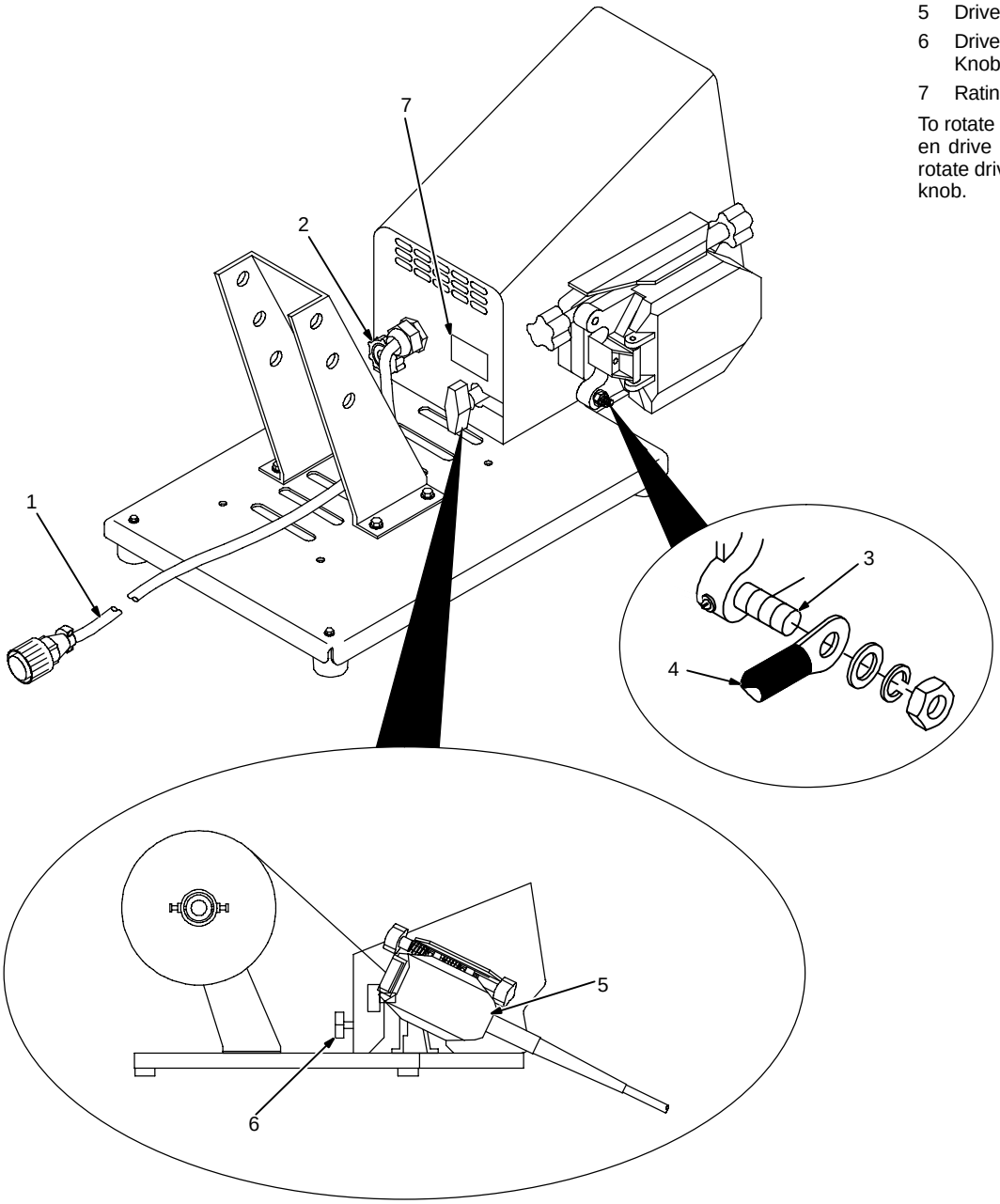

Tools Needed:

9/16, 5/8 in

3/16 in

802 824-A / 802 825-A

4-3. 14-Pin Plug PLG12 Information

REMOTE 14	Pin*	Pin Information
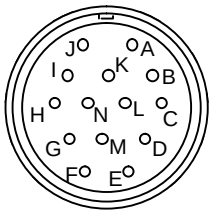	A	24 volts ac with respect to socket G.
	B	Contact closure to A completes 24 volts ac contactor control circuit.
	G	Circuit common for 24 volts AC circuit.
	C	+10 volts dc input from power source to wire feeder with respect to socket D.
	D	Remote control circuit common.
	E	0 to +10 volts dc output signal from wire feeder to power source with respect to socket D.
	H	Voltage feedback; 0 to +10 volts dc, 1 volt per 10 arc volts.
	F	Current feedback; 0 to +10 volts dc, 1 volt per 100 amperes.
*The remaining pins are not used.		

4-4. Gun Recommendation Table

Process	Gun
GMAW – Hard or Cored Wires	Roughneck C-Series Guns: 300, 400, 500, And 600 Amp.
FCAW – Self-Shielding Wires	FC-1260 Or FC-1150

4-5. Wire Type, Size, And Feed Speed Capability Table

Motor Speed	Wire Type	Wire Size	Feed Speed Capability
Standard	All	.023 To 5/64 in (0.6 To 2 mm)	50 To 780 ipm (1.3 To 19.8 mpm)
Standard	All	3/32 To 7/64 in (2.4 To 2.8 mm)	50 To 700 ipm (1.3 To 17.8 mpm)
Standard	All	1/8 in (3.2 mm)	50 To 300 ipm (1.3 To 7.6 mpm)
Optional High Speed	All	.023 To 5/64 in (0.6 To 2 mm)	92 To 1435 ipm (2.3 To 36.4 mpm)

4-6. Installing And Threading Welding Wire

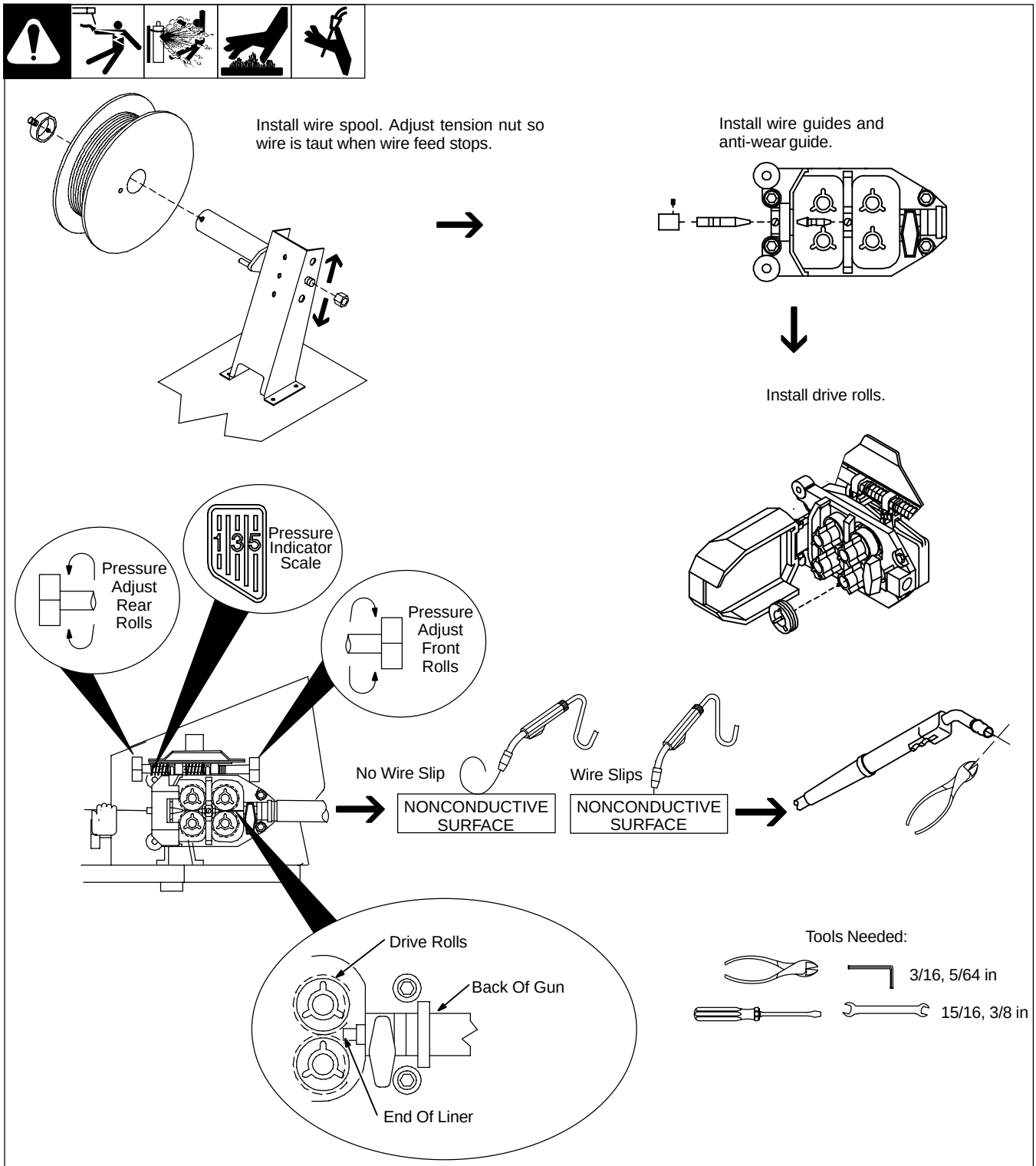

☞ *Be sure that outlet cable has proper size liner for the welding wire size.* ***When installing gun, position liner (extending from outlet wire guide) as close as possible to drive rolls without touching.***

Install gun. Lay gun cable out straight. Cut off end of wire. Push wire through guides up to drive rolls; continue to hold wire. Press Jog button to feed wire out gun.

☞ *For soft wire or small diameter stainless steel wire, reduce drive roll pressure on the rear roll to half that of the front rolls.*

☞ To adjust drive roll pressure, hold nozzle about 2 in (51 mm) from nonconductive surface and press gun trigger to feed wire against surface. Tighten knob so wire does not slip. Do not overtighten. If contact tip is completely blocked, wire should slip at the feeder (see pressure adjustment above).Cut wire off. Close cover.

Ref. 156 929-A / Ref. 150 922 / Ref. 156 930 / S-0627-A

4-7. Setting Internal DIP Switches

Remove wrapper.

1 DIP Switch S1 On Motor Board PC1

- **Setting Current Detect Override (S1-1)**

Current detect override is used to disable run-in when a welding power source is used that doesn't provide current feedback through the 14-pin receptacle.

☞ *Pins F & H are not present in 14 pin receptacle on machines that don't provide current feedback.*

Install wrapper when finished.

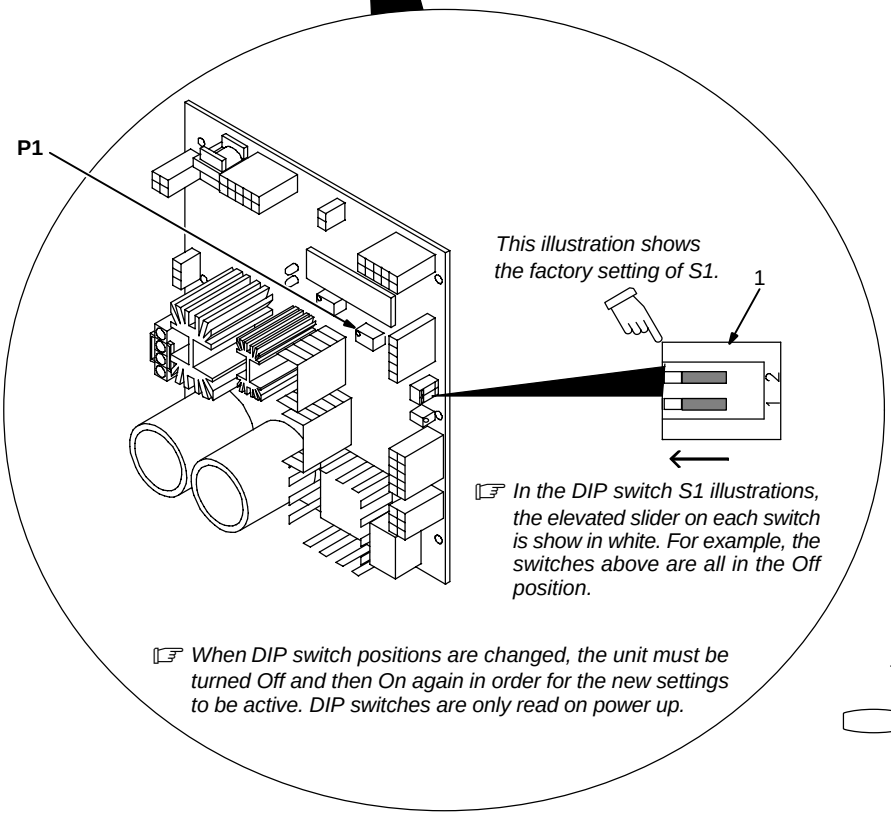

☞ *In the DIP switch S1 illustrations, the elevated slider on each switch is show in white. For example, the switches above are all in the Off position.*

☞ *When DIP switch positions are changed, the unit must be turned Off and then On again in order for the new settings to be active. DIP switches are only read on power up.*

Tools Needed:

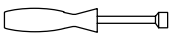

1/4 in

Position Settings And Results For DIP Switch S1 On PC1

Automatic Run-In (ON) (Factory Default)

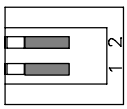

S1-1 And S1-2

On = Run-In speed is approximately 1/2 weld wire feed speed.

Automatic Run-In (OFF)

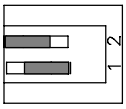

S1-1 And S1-2

Off = Run-In speed is set using potentiometer P1 located on Motor PCB.

Current Detect Override (ON)

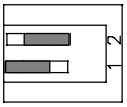

S1-1 And S1-2

On = Current detect override. For welding power sources that don't provide current feedback through the 14-pin receptacle. Run-in is inactive.

Current Detect Override (OFF) (Factory Default)

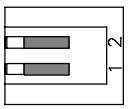

S1-1 And S1-2

Off = Current must be detected from power sources that provide current feedback through the 14-pin receptacle to go from run-in to welding condition. Run-in is active.

803 063 / Ref. 802 944

4-8. Equipment DIP Switch Settings (For Models With Meters Only)

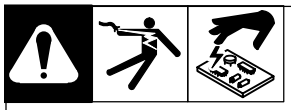

Remove wrapper.

Install wrapper when finished.

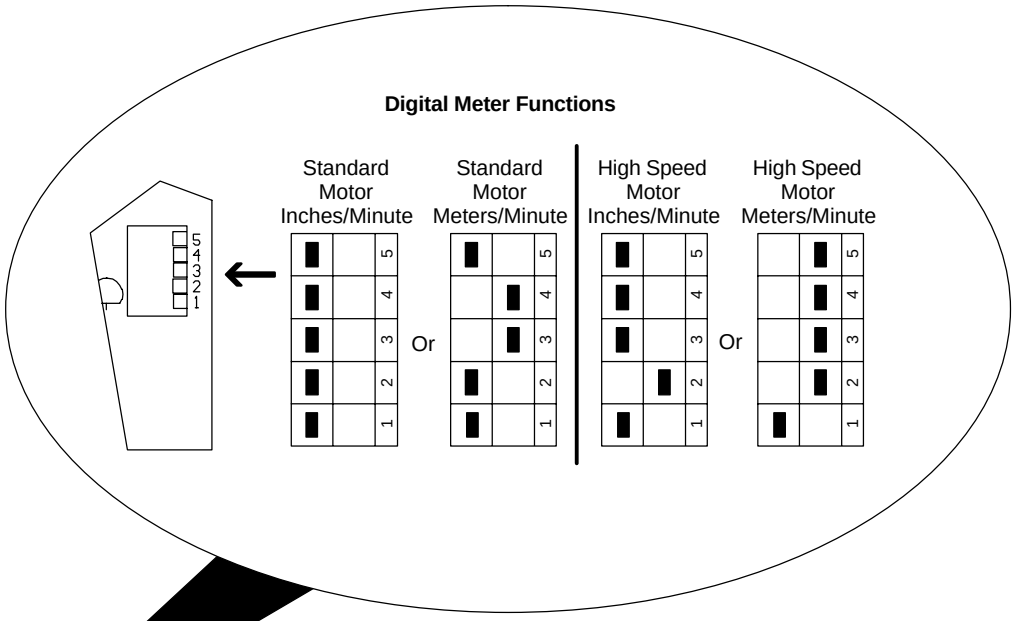

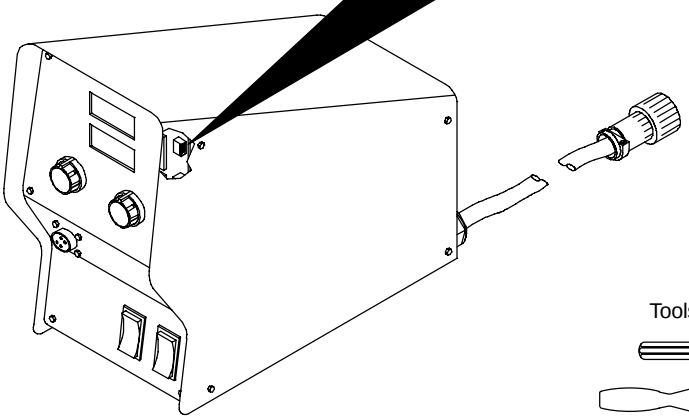

Tools Needed:

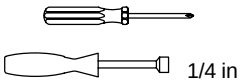

1/4 in

Ref. 802 946

5-1. Power Switch

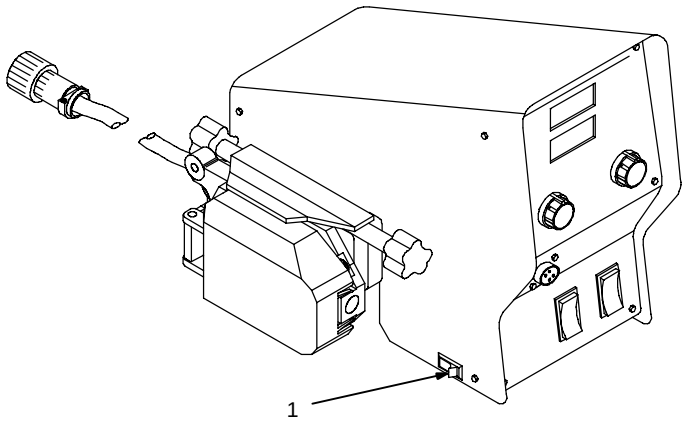

1 Power Switch

802 827-A

5-2. Jog/Purge

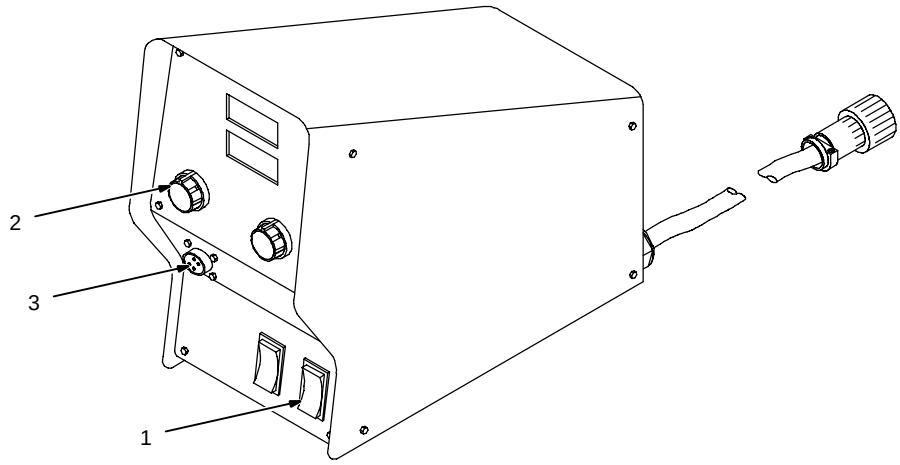

1 Jog/Purge Push Button
2 Wire Speed Control
3 Gun Trigger Receptacle

Pressing the Jog/Purge switch allows the operator to jog wire without energizing the weld power or gas valve circuit.

- The wire feeder can also be jogged by using the gun trigger. However, the contactor is energized for 3 seconds.
- If the welding arc does not initiate in 3 seconds after the gun trigger is activated the unit will perform a jog operation for a maximum of two minutes. If the gun trigger is still activated after two minutes, the jog operation is terminated to prevent complete despooling of the wire, as in the case of a damaged gun.
- Jog speed can be adjusted with the Wire Speed control when the unit is jogging wire. If equipped with meters, the unit displays jog speed while the unit is being jogged.
- Pressing the Jog/Purge button also allows the operator to purge gas lines before welding and to preset gas pressure at the regulator.

802 828-A

5-3. Trigger Hold Switch

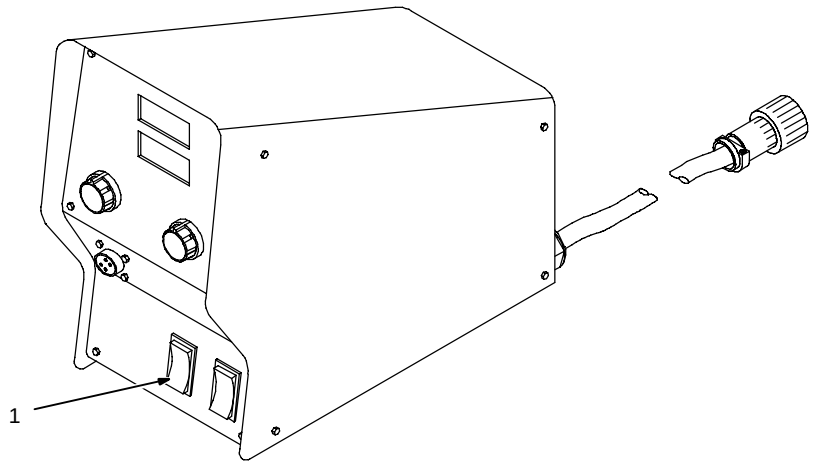

802 828-A

1 Trigger Hold Switch

Trigger hold allows the operator to weld without holding the gun trigger.

- To use the trigger hold function, place the trigger hold switch in the On position.
- The operator must hold the trigger for a minimum of 2 seconds, but not longer than 6 seconds before releasing it. Welding will continue when the trigger is released.
- To stop welding, press the trigger again.

5-4. Voltage Control And Digital Meters (For Models With Meters Only)

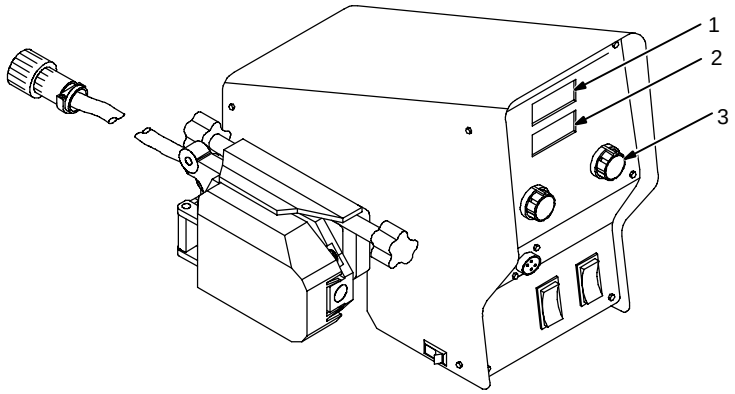

1 Voltmeter

The voltmeter displays actual or preset voltage from the welding power source through the 14–pin control cable.

2 Wire Speed Meter

The wire speed meter is factory set to display inches per minute. If display of meters per minute is desired, see Section 4-8.

3 Voltage Control

Use control to adjust voltage output of welding power source.

☞ *You can adjust the preset voltage display on the wire feeder to match your power source's display by adjusting P2 on motor control board PC1. See Section 6-2 for location of P2.*

802 827-A

6-1. Routine Maintenance

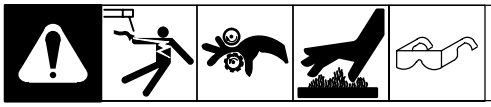

▲ **Disconnect power before maintaining.**

3 Months

Replace unreadable labels.

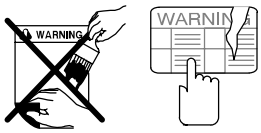

Clean and tighten weld terminals.

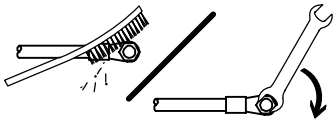

Repair or replace cracked weld cable.

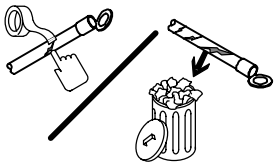

Replace cracked parts.

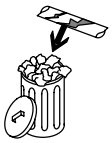

Check 14-pin cord.

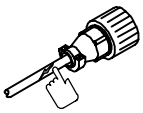

Check gas hose and fittings.

Check gun cable.

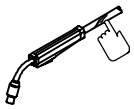

6 Months

Blow out or vacuum inside. During heavy service, clean monthly.

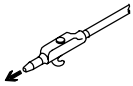

Or

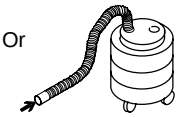

Clean drive rolls.

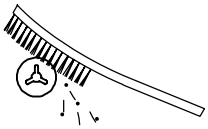

Notes

6-2. Diagnostics

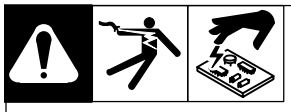

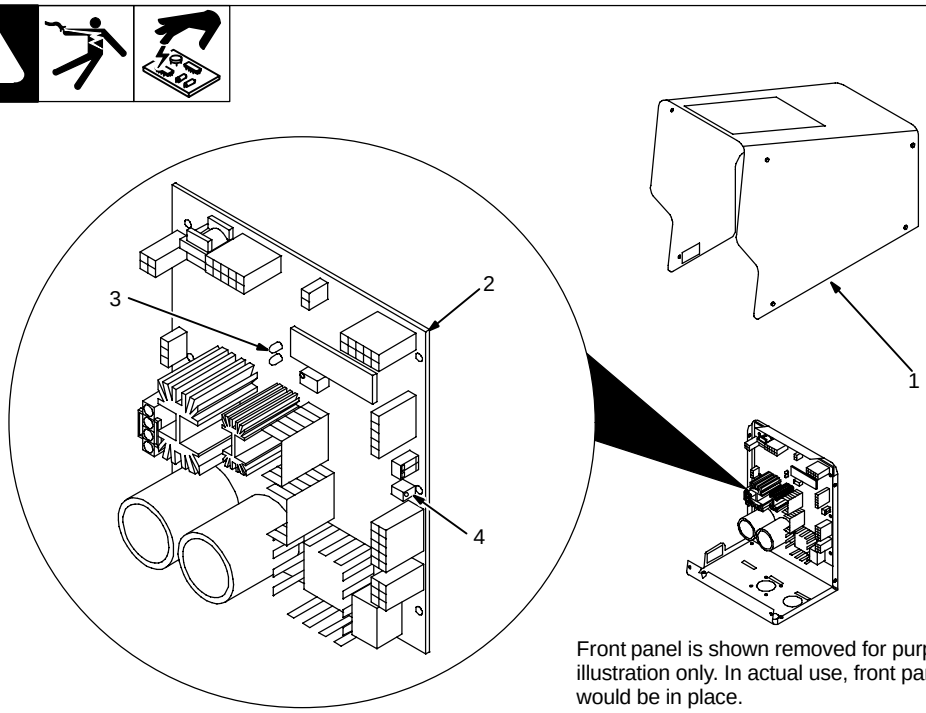

1 Wrapper
2 Motor Control Board PC1
3 LED3
4 P2

Front panel is shown removed for purpose of illustration only. In actual use, front panel would be in place.

Display On Meter (If Equipped)	LED3 Sequence On Motor Control Board PC1	Indicated Error
HELP 11	1 Blink	Communication Error
HELP 12	2 Blinks	Trigger Error
HELP 13	3 Blinks	Tach Error
HELP 14	*4 Blinks	Motor Error

*Since blink On time and blink Off time are equal in a four-blink cycle, the four–blink sequence appears as constant blinking.

Ref. 802 687

- **Error Indications**

Error conditions are indicated by LED3 on PC1 or on display (on models with meters). To view LED3, turn Off unit, remove wrapper, and turn unit On. LED3 is most easily observed from the left side of the unit.

The LED blinks in a 2.5 second cycle. The number of blinks in this period indicates the type of error.

The priority of the errors is related to the number of blinks indicating the error. The more blinks, the more severe the error (motor error is top priority). A higher priority error overrides a lower one (if a motor error and a communication error existed, the light would blink four times for the motor error).

- **The communication error** occurs 2.5 seconds after a loss of communication between the motor and the meter board (if equipped). The user may continue to weld with this error. The error may be cleared by turning power Off, waiting a minimum of two seconds, and turning power On.
- **The trigger error** occurs if the user has the trigger held for more than two minutes without striking an arc (providing current override is not enabled), or if the user holds the trigger past the postflow phase in a timed weld. This error also occurs if the trigger is held when the feeder is powered up. The error may be cleared by releasing the trigger.
- **The tach error** occurs 2 seconds after the loss of tachometer feedback. The user may continue to weld with this error. The motor speed is regulated through the monitoring of voltage and current.
- **The motor error** indicates that the motor has been drawing too much current for too long. To remedy this, reduce the wire feed speed or the wire feeder torque load/duty cycle.

6-3. Troubleshooting

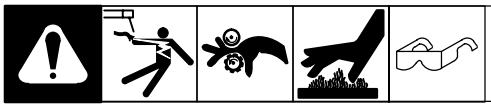

▲ **Disconnect power before troubleshooting**

Trouble	Remedy
Wire feeds, shielding gas flows, but electrode wire is not energized.	Check cable connections. Check cables for continuity, and repair or replace cables if necessary (see Section 4-2).
Wire feeder is on, display does not light up, motor does not run, gas valve and welding power source contactor do not pull in.	Check and reset circuit breaker at welding power source.
Electrode wire feeding stops or feeds erratically during welding.	Check gun trigger connection. See gun Owner's Manual.
	Check gun trigger. See gun Owner's Manual.
	Readjust hub tension and drive roll pressure (see Section 4-6).
	Change to correct size drive roll (see 4-6).
	Clean or replace dirty or worn drive roll.
	Incorrect size or worn wire guides.
	Replace contact tip or liner. See gun Owner's Manual.
	Remove weld spatter or foreign matter from around nozzle opening.
	Have Factory Authorized Service Agency check drive motor or motor control board PC1.
Motor runs slowly.	Check for correct input voltage.
Wire feeder power is on, displays light up, but unit is inoperative.	Check welding gun trigger leads for continuity, and repair leads or replace gun.

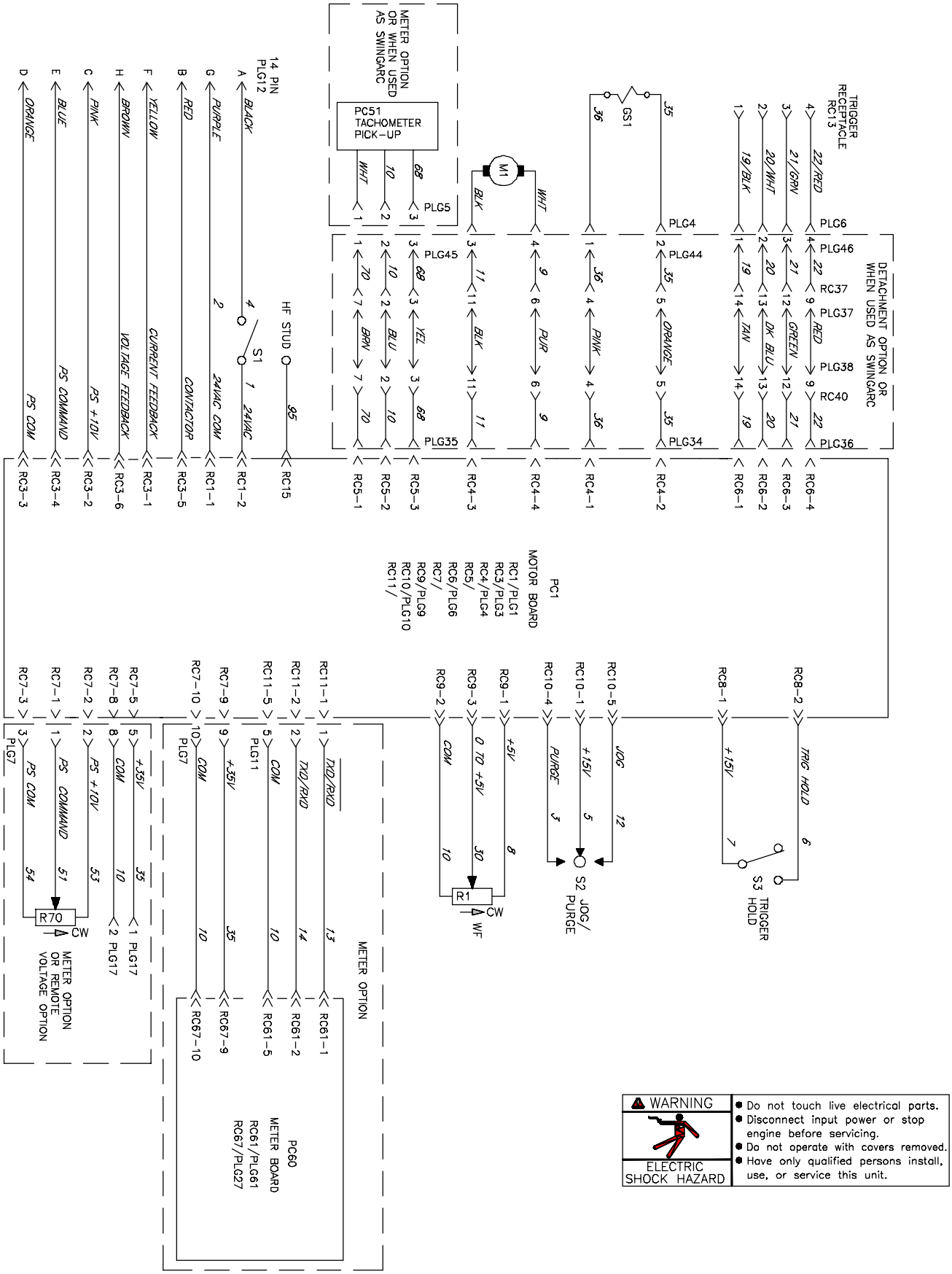

202 246-A

Figure 7-1. Circuit Diagram

Notes

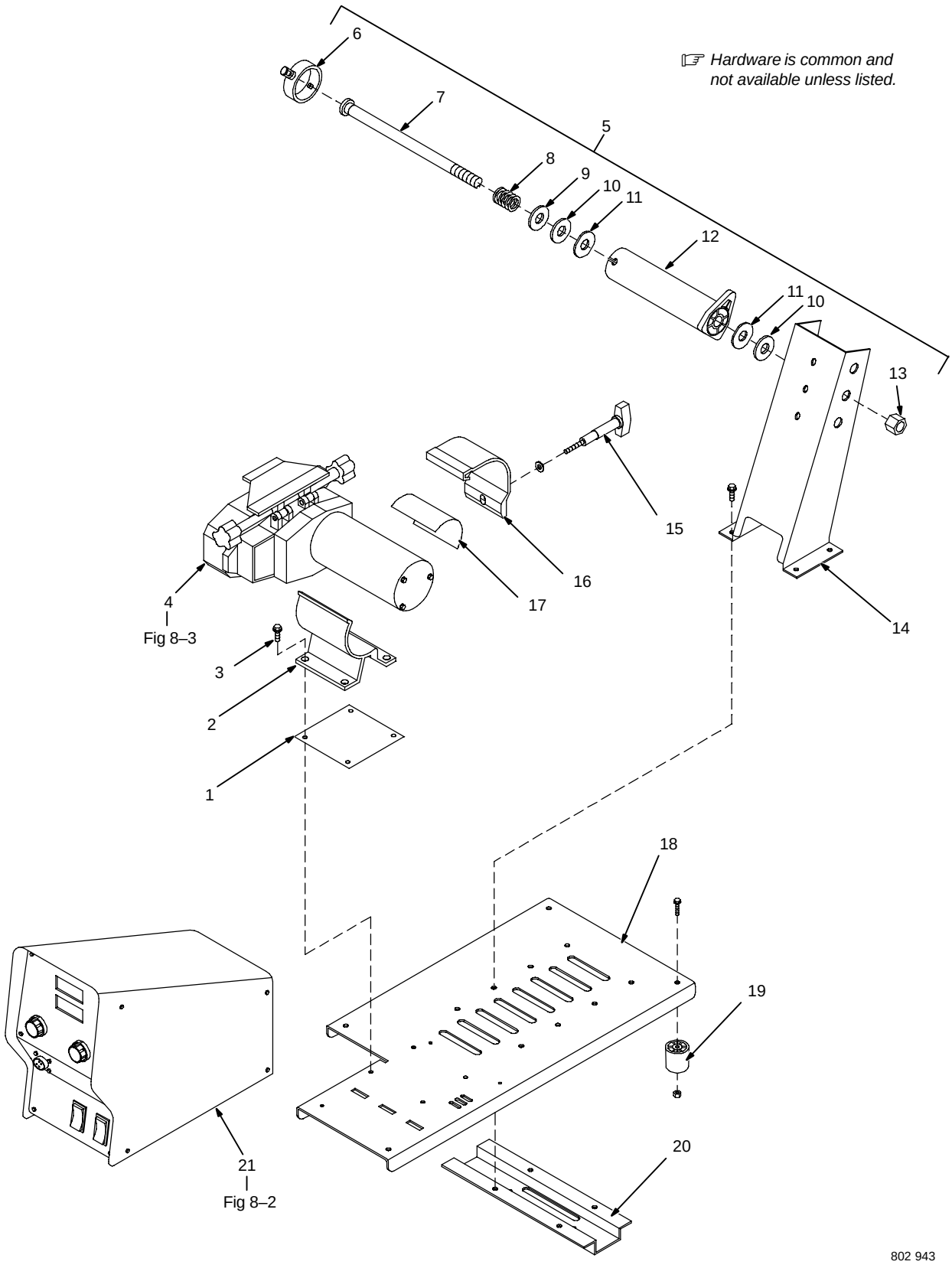

Figure 8-1. Main Assembly

Item No.	Part No.	Description	Quantity
		Figure 8-1. Main Assembly	
1	159 647	INSULATOR, motor clamp	1
2	159 646	CLAMP, motor base	1
3	159 360	INSULATOR, screw machine	4
4	Figure 8-3	DRIVE ASSEMBLY, wire	1
5	141 753	HUB & SPINDLE ASSEMBLY, (consisting of)	1
6	058 427	RING, retaining spool	1
7	180 571	SHAFT, support spool	1
8	010 233	SPRING, cprsn .970 OD x .120 wire x 1.250pld	1
9	057 971	WASHER, flat stl keyed 1.500dia x .125thk	1
10	010 191	WASHER, fbr .656 ID x 1.500 OD x .125thk	2
11	058 628	WASHER, brake stl	2
12	058 428	HUB, spool	1
13	135 205	NUT, stl slflkg hex reg .625-11 w/nylon insert	1
14	200 556	SUPPORT, spool	1
15	201 781	KNOB, w/extension clamp	1
16	156 243	CLAMP, motor top	1
17	145 639	STRIP, buna N compressed sheet .062 x 4.000 x 4.000	1
18	200 552	BASE	1
19	134 306	FOOT, rubber 1.250 dia x 1.375 high no 10 screw	4
20	200 557	STIFFENER, base	1
21	Figure 8-2	CONTROL BOX	1

+When ordering a component originally displaying a precautionary label, the label should also be ordered.

To maintain the factory original performance of your equipment, use only Manufacturer's Suggested Replacement Parts. Model and serial number required when ordering parts from your local distributor.

☞ *Hardware is common and not available unless listed.*

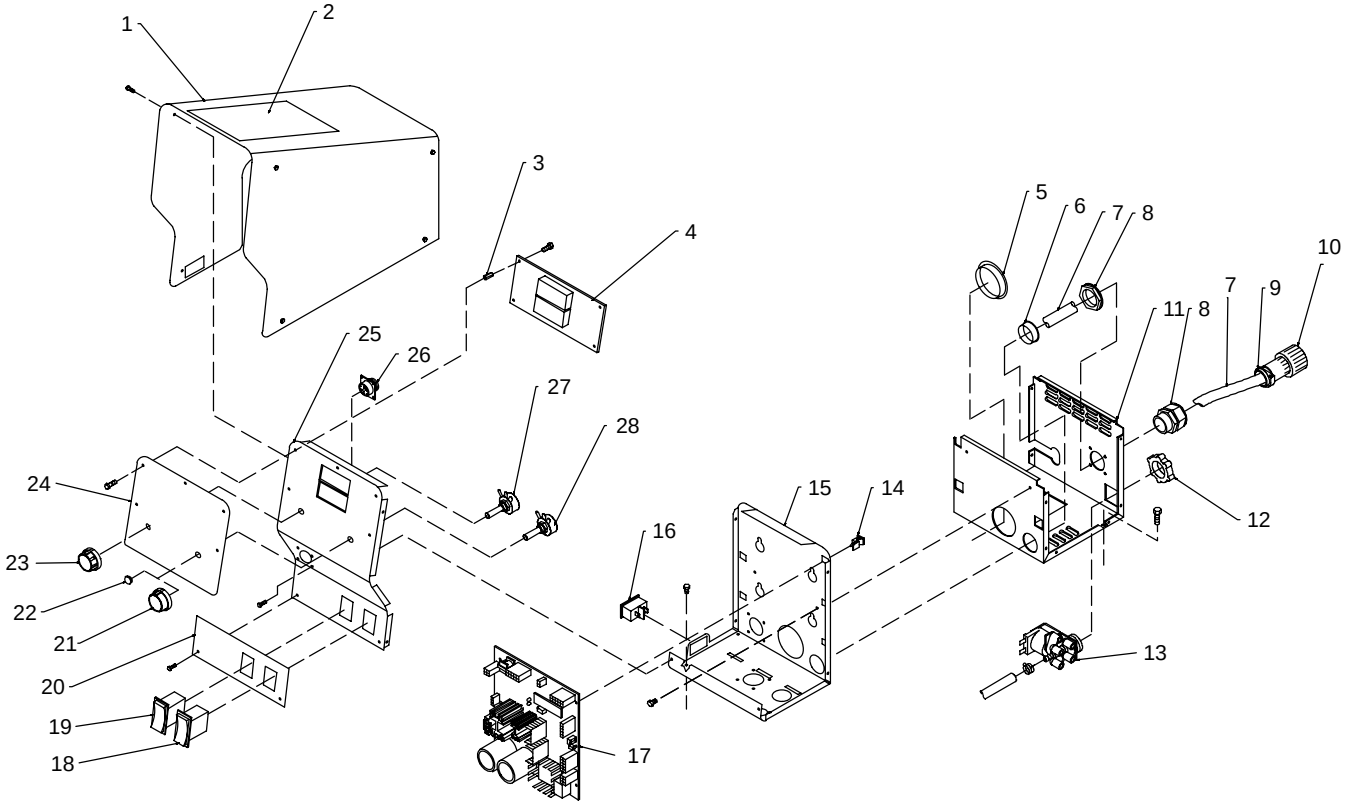

802 945-A

Figure 8-2. Control Box

Item No.	Dia. Mkgs.	Part No.	Description	Quantity Model S-74S	Quantity Model S-74D
			Figure 8-2. Control Box (Figure 8-1 Item 21)		
1		200 555	WRAPPER, feeder	1	1
2		134 464	LABEL, General Precautionary for Static & Wire Feed	1	1
2		178 936	LABEL, General Precautionary Wordless CE WF (CE Version)	1	1
3		115 443	STAND-OFF, no 6-32 x .750	0	4
4	PC60	210 563	CIRCUIT CARD ASSEMBLY, meter w/program	0	1
5		010 494	BUSHING, snap–in nyl 1.375 id x 1.750 mtg hole	1	1
6		057 357	BUSHING, snap–in nyl .937 id x 1.125 mtg hole	1	1
		204 910	CABLE, power (consisting of)	1	1
7		163 519	CABLE, port	11.5 ft	
8		139 041	STRAIN RELIEF	1	1
9		079 739	CONN, circ cpc clamp str rlf	1	1
10	PLG12	141 162	HOUSING PLUG+PINS, (service kit)	1	1
	PLG3	115 093	HOUSING PLUG+SKTS, (service kit)	1	1
11		200 554	ENCLOSURE, motor	1	1
12		605 227	NUT, 750–14 knurled1.68dia .41h nyl	1	1
13	GS1	200 333	VALVE, 34 VDC 2 way custom port 1/8 orf	1	1
14		134 201	STAND–OFF SUPPORT, pc card	6	6
15		200 551	ENCLOSURE, control	1	1
16	S1	111 997	SWITCH, rocker spst 10A 250 VAC on–off	1	1
17	PC1	210 555	CIRCUIT CARD ASSY, motor control	1	1
18	S2	200 295	SWITCH, rocker spdt 15A 12V (on)–off–(on)	1	1
19	S3	201 642	SWITCH, rocker spdt 15A 12V on–none–on	1	1
20		203 216	NAMEPLATE, Lower	1	1
20		206 296	NAMEPLATE, Lower (CE Version)	1	1

Item No.	Dia. Mkgs.	Part No.	Description	Quantity Model S-74S	Quantity Model S-74D
			Figure 8-2. Control Box (Figure 8-1 Item 21)		
21		171 007	KNOB, pointer 1.670 dia x .250 id w/set screwsplstc	0	1
22		119 951	BLANK, snap-in nyl .437 mtg hole black	1	0
23		171 007	KNOB, pointer 1.670 dia x .250 id w/set screwsplstc	1	1
24		203 212	NAMEPLATE, upper	1	0
24		206 432	NAMEPLATE, upper (CE Version)	1	0
24		203 214	NAMEPLATE, upper w/meters	0	1
24		206 295	NAMEPLATE, upper w/meters (CE Version)	0	1
24		203 216	NAMEPLATE, lower	1	1
24		206 296	NAMEPLATE, lower (CE Version)	1	1
25		202 237	PANEL, front	1	1
26	RC13	048 282	RCPT W/SKTS, (service kit)	1	1
	PLG8	131 054	HOUSING RCPT+SKTS, (service kit)	1	1
	PLG9	201 665	HOUSING PLUG+SKTS, (service kit)	1	1
	PLG6	115 094	HOUSING PLUG+SKTS, (service kit)	1	1
	PLG1	202 592	HOUSING PLUG PINS+SKTS, (service kit)	1	1
	PLG4	136 810	HOUSING PLUG PINS+SKTS, (service kit)	1	1
	PLG10	130 203	HOUSING PLUG+SKTS, (service kit)	1	1
27	R1	073 562	POTENTIOMETER, cp std slot 1t 2w 10k linear	1	0
27	R1	603 856	POTENTIOMETER, ww sltd sft 10/T 2w 10k ohm	0	1
28	R70	603 856	POTENTIOMETER, ww sltd sft 10/T 2w 10k ohm	0	1
	PLG7,27	115 091	HOUSING PLUG+SKTS, (service kit)	0	1
	PLG11, 61	131 055	HOUSING PLUG+SKTS, (service kit)	0	1
	PLG17	158 719	HOUSING PLUG+SKTS, (service kit)	0	1

+When ordering a component originally displaying a precautionary label, the label should also be ordered.

To maintain the factory original performance of your equipment, use only Manufacturer's Suggested Replacement Parts. Model and serial number required when ordering parts from your local distributor.

☞ *Hardware is common and not available unless listed.*

See Table 8-1 For Drive Roll & Wire Guide Kits

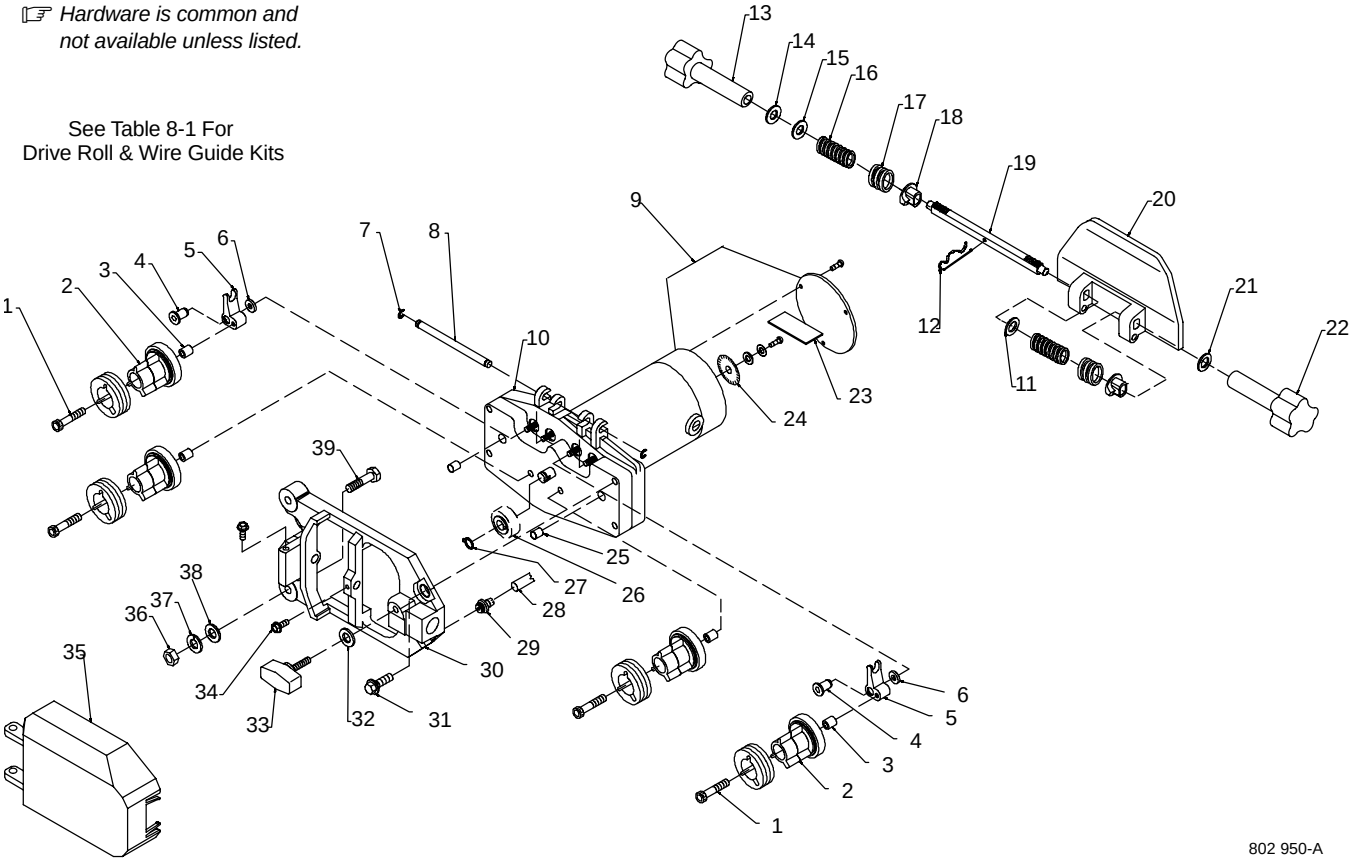

Figure 8-3. Drive Assembly, Wire

Item No.	Dia. Mkgs.	Part No.	Description	Quantity Model S-74S	Quantity Model S-74D
			Figure 8-3. Drive Assembly, Wire (Figure 8-1 Item 4)		
1		010 668	Screw, Cap Stl Sch .250-20 X 1.500	4	4
2		172 075	Carrier, Drive Roll W/Components	4	4
3		149 962	Spacer, Carrier Drive Roll	4	4
4		149 486	Pin, Rotation Arm Rocker	2	2
5		132 750	Arm, Pressure	2	2
6		150 520	Spacer, Flat Stl .257 Id X .619 Od X .105	2	2
7		133 493	Ring, Retaining Ext .250 Shaft X .025thk	2	2
8		133 350	Pin, Hinge	1	1
9	M1	201 230	Motor, Gear 1/8Hp 24VDC Standard Speed	1	1
9	M1	201 231	Motor, Gear 1/8Hp 24VDC High Speed (Optional On S-74D)	0	1
		153 491	Kit, Brush Replacement (Consisting Of)	1	1
		153 492	Cap, Brush	2	2
		*153 493	Brush, Carbon	2	2
		184 136	Kit, Brush Holder Replacement	1	2
10		155 098	Kit, Cover Motor Gearbox (Consisting Of)	1	1
		153 550	Cover, Motor Gearbox (Consisting Of)	1	1
		155 099	Gasket, Cover	1	1
		155 100	Screw, Cover	5	5
		154 031	Spacer, Locating	2	2
		133 493	Ring, Rtng Ext .250 Shaft Grv X .025Thk	1	1

Item No.	Dia. Mkgs.	Part No.	Description	Quantity Model S-74S	Quantity Model S-74D

Figure 8-3. Drive Assembly, Wire (Continued)

		173 837	Pressure Arm (Consisting Of)	1	1
11		182 414	Washer, Flat	1	1
12		182 415	Pin, Cotter Hair	1	1
13		203 640	Knob, W/Extension Short Pressure Arm	1	1
14		602 200	Washer, Lock Stl Split No. 8	1	1
15		604 772	Washer, Flat Stl Sae No. 8	1	1
16		182 156	Spring, Cprsn	4	4
17		182 155	Spring	2	2
18		132 746	Bushing, Spring	2	2
19		203 633	Shaft, Spring	1	1
20		132 747	Carrier, Shaft	1	1
21		133 739	Washer, Flat Buna .375 Id X .625 Od X .062thk	1	1
22		203 637	Knob, W/Extension Long Pressure Arm	1	1
23	PC51	201 225	Circuit Card, Digital Tach (Consisting Of)	0	1
	PLG5	131 204	Connector & Sockets	0	1
		604 311	Grommet, Rbr .250 Id X .375mtg Hole .062 Groove	0	1
24		132 611	Optical Encoder Disc	0	1
		603 115	Weather Stripping, Adh .125 X .375	0	1
25		167 387	Spacer, Locating	2	2
26		168 825	Drive, Pinion	1	2
27		133 308	Ring, Retaining Ext .375 Shaft X .025thk	1	1
28		134 834	Hose, Sae .187 Id X .410 Od (Order By Ft)	2 Ft	
29		149 959	Fitting, Brs Barbed M 3/16Tbg X .312-24	1	1
30		179 265	Adapter, Gun/Feeder	1	1
31		108 940	Screw, Cap Stl Hexhd .250-20 X .750	4	4
32		604 538	Washer, Flat Stl Sae .312	1	1
33		151 437	Knob, Plstc T 1.125 Lg X .312-18 X 1.500	1	1
34		151 290	Screw, Mach Stl Hexwhd 10-32 X .500	2	2
35		179 277	Cover, Drive Roll (Consisting Of)	1	1
		178 937	Label, Warning Electric Shock	1	1
36		601 872	Nut, Stl Hex Full Fnsh .375-16	1	1
37		602 213	Washer, Lock Stl Split .375	1	1
38		602 243	Washer, Flat Stl Std .375	1	1
39		601 966	Screw, Cap Stl Hexhd .375-16 X 1.250	1	1

*Recommended Spare Parts.

To maintain the factory original performance of your equipment, use only Manufacturer's Suggested Replacement Parts. Model and serial number required when ordering parts from your local distributor.

Table 8-1. Drive Roll And Wire Guide Kits

Wire Size		Inlet Guide	Intermediate Guide	V-GROOVE		U-GROOVE		VK-GROOVE		UC-GROOVE	
Fraction	Metric			4 Roll Kit	Drive Roll	4 Roll Kit	Drive Roll	4 Roll Kit	Drive Roll	4 Roll Kit	Drive Roll
.023-.025 in.	0.6 mm	150 993	149 518	151 024	087 130						
.030 in.	0.8 mm	150 993	149 518	151 025	053 695						
.035 in.	0.9 mm	150 993	149 518	151 026	053 700	151 036	072 000	151 052	132 958		
.040 in.	1.0 mm	150 993	149 518	161 190							
.045 in.	1.1/1.2 mm	150 994	149 519	151 027	053 697	151 037	053 701	151 053	132 957	151 070	083 489
.052 in.	1.3/1.4 mm	150 994	149 519	151 028	053 698	151 038	053 702	151 054	132 956	151 071	083 490
1/16 in. (.062 in.)	1.6 mm	150 995	149 520	151 029	053 699	151 039	053 706	151 055	132 955	151 072	053 708
.068-.072 in.	1.8 mm	150 995	149 520					151 056	132 959		
5/64 in. (.079 in.)	2.0 mm	150 995	149 520			151 040	053 704	151 057	132 960	151 073	053 710
3/32 in. (.094 in.)	2.4 mm	150 996	149 521			151 041	053 703	151 058	132 961	151 074	053 709
7/64 in. (.110 in.)	2.8 mm	150 996	149 521			151 042	053 705	151 059	132 962	151 075	053 711
1/8 in. (.125 in.)	3.2 mm	150 997	149 522			151 043	053 707	151 060	132 963	151 076	053 712

Each Kit Contains An Inlet Guide, Intermediate Guide, And 045 233 Antiwear Guide w/604 612 Setscrew 8-32 x .125, along with 4 Drive Rolls.

Ref. S-0527-C

Warranty Questions?

Call
1-800-4-A-MILLER
for your local
Miller distributor.

Your distributor also gives you ...

Service
You always get the fast, reliable response you need. Most replacement parts can be in your hands in 24 hours.

Support
Need fast answers to the tough welding questions? Contact your distributor. The expertise of the distributor and Miller is there to help you, every step of the way.

TRUE BLUE® WARRANTY

Effective January 1, 2002
(Equipment with a serial number preface of “LC” or newer)

This limited warranty supersedes all previous Miller warranties and is exclusive with no other guarantees or warranties expressed or implied.

LIMITED WARRANTY – Subject to the terms and conditions below, Miller Electric Mfg. Co., Appleton, Wisconsin, warrants to its original retail purchaser that new Miller equipment sold after the effective date of this limited warranty is free of defects in material and workmanship at the time it is shipped by Miller. THIS WARRANTY IS EXPRESSLY IN LIEU OF ALL OTHER WARRANTIES, EXPRESS OR IMPLIED, INCLUDING THE WARRANTIES OF MERCHANTABILITY AND FITNESS.

Within the warranty periods listed below, Miller will repair or replace any warranted parts or components that fail due to such defects in material or workmanship. Miller must be notified in writing within thirty (30) days of such defect or failure, at which time Miller will provide instructions on the warranty claim procedures to be followed.

Miller shall honor warranty claims on warranted equipment listed below in the event of such a failure within the warranty time periods. All warranty time periods start on the date that the equipment was delivered to the original retail purchaser, or one year after the equipment is sent to a North American distributor or eighteen months after the equipment is sent to an International distributor.

1. 5 Years Parts – 3 Years Labor
   * Original main power rectifiers
   * Inverters (input and output rectifiers only)
2. 3 Years — Parts and Labor
   * Transformer/Rectifier Power Sources
   * Plasma Arc Cutting Power Sources
   * Semi-Automatic and Automatic Wire Feeders
   * Inverter Power Supplies
   * Intellitig
   * Engine Driven Welding Generators
     (NOTE: Engines are warranted separately by the engine manufacturer.)
3. 1 Year — Parts and Labor Unless Specified
   * DS-2 Wire Feeder
   * Motor Driven Guns (w/exception of Spoolmate Spoolguns)
   * Process Controllers
   * Positioners and Controllers
   * Automatic Motion Devices
   * RFCS Foot Controls
   * Induction Heating Power Sources
   * Water Coolant Systems
   * Flowgauge and Flowmeter Regulators (No Labor)
   * HF Units
   * Grids
   * Maxstar 85, 140
   * Spot Welders
   * Load Banks
   * Racks
   * Running Gear/Trailers
   * Plasma Cutting Torches (except APT & SAF Models)
   * Field Options
     (NOTE: Field options are covered under True Blue® for the remaining warranty period of the product they are installed in, or for a minimum of one year — whichever is greater.)
4. 6 Months — Batteries
5. 90 Days — Parts
   * MIG Guns/TIG Torches
   * Induction Heating Coils and Blankets
   * APT, ZIPCUT & PLAZCUT Model Plasma Cutting Torches
   * Remote Controls
   * Accessory Kits
   * Replacement Parts (No labor)
   * Spoolmate Spoolguns
   * Canvas Covers

Miller's True Blue® Limited Warranty shall not apply to:

1. **Consumable components; such as contact tips, cutting nozzles, contactors, brushes, slip rings, relays or parts that fail due to normal wear. (Exception: brushes, slip rings, and relays are covered on Bobcat, Trailblazer, and Legend models.)**
2. Items furnished by Miller, but manufactured by others, such as engines or trade accessories. These items are covered by the manufacturer's warranty, if any.
3. Equipment that has been modified by any party other than Miller, or equipment that has been improperly installed, improperly operated or misused based upon industry standards, or equipment which has not had reasonable and necessary maintenance, or equipment which has been used for operation outside of the specifications for the equipment.

MILLER PRODUCTS ARE INTENDED FOR PURCHASE AND USE BY COMMERCIAL/INDUSTRIAL USERS AND PERSONS TRAINED AND EXPERIENCED IN THE USE AND MAINTENANCE OF WELDING EQUIPMENT.

In the event of a warranty claim covered by this warranty, the exclusive remedies shall be, at Miller's option: (1) repair; or (2) replacement; or, where authorized in writing by Miller in appropriate cases, (3) the reasonable cost of repair or replacement at an authorized Miller service station; or (4) payment of or credit for the purchase price (less reasonable depreciation based upon actual use) upon return of the goods at customer's risk and expense. Miller's option of repair or replacement will be F.O.B., Factory at Appleton, Wisconsin, or F.O.B. at a Miller authorized service facility as determined by Miller. Therefore no compensation or reimbursement for transportation costs of any kind will be allowed.

TO THE EXTENT PERMITTED BY LAW, THE REMEDIES PROVIDED HEREIN ARE THE SOLE AND EXCLUSIVE REMEDIES. IN NO EVENT SHALL MILLER BE LIABLE FOR DIRECT, INDIRECT, SPECIAL, INCIDENTAL OR CONSEQUENTIAL DAMAGES (INCLUDING LOSS OF PROFIT), WHETHER BASED ON CONTRACT, TORT OR ANY OTHER LEGAL THEORY.

ANY EXPRESS WARRANTY NOT PROVIDED HEREIN AND ANY IMPLIED WARRANTY, GUARANTY OR REPRESENTATION AS TO PERFORMANCE, AND ANY REMEDY FOR BREACH OF CONTRACT TORT OR ANY OTHER LEGAL THEORY WHICH, BUT FOR THIS PROVISION, MIGHT ARISE BY IMPLICATION, OPERATION OF LAW, CUSTOM OF TRADE OR COURSE OF DEALING, INCLUDING ANY IMPLIED WARRANTY OF MERCHANTABILITY OR FITNESS FOR PARTICULAR PURPOSE, WITH RESPECT TO ANY AND ALL EQUIPMENT FURNISHED BY MILLER IS EXCLUDED AND DISCLAIMED BY MILLER.

Some states in the U.S.A. do not allow limitations of how long an implied warranty lasts, or the exclusion of incidental, indirect, special or consequential damages, so the above limitation or exclusion may not apply to you. This warranty provides specific legal rights, and other rights may be available, but may vary from state to state.

In Canada, legislation in some provinces provides for certain additional warranties or remedies other than as stated herein, and to the extent that they may not be waived, the limitations and exclusions set out above may not apply. This Limited Warranty provides specific legal rights, and other rights may be available, but may vary from province to province.

miller_warr 6/02

Owner's Record

Please complete and retain with your personal records.

Model Name Serial/Style Number

Purchase Date (Date which equipment was delivered to original customer.)

Distributor

Address

City

State Zip

For Service

Call 1-800-4-A-Miller or see our website at www.MillerWelds.com to locate a DISTRIBUTOR or SERVICE AGENCY near you.

Always provide Model Name and Serial/Style Number.

Contact your Distributor for:

- Welding Supplies and Consumables
- Options and Accessories
- Personal Safety Equipment
- Service and Repair
- Replacement Parts
- Training (Schools, Videos, Books)
- Technical Manuals (Servicing Information and Parts)
- Circuit Diagrams
- Welding Process Handbooks

Contact the Delivering Carrier To:

File a claim for loss or damage during shipment.

For assistance in filing or settling claims, contact your distributor and/or equipment manufacturer's Transportation Department.

Miller Electric Mfg. Co.
An Illinois Tool Works Company
1635 West Spencer Street
Appleton, WI 54914 USA

International Headquarters–USA
USA Phone: 920-735-4505 Auto-Attended
USA & Canada FAX: 920-735-4134
International FAX: 920-735-4125

European Headquarters – United Kingdom
Phone: 44 (0) 1204-593493
FAX: 44 (0) 1204-598066

www.MillerWelds.com

PRINTED IN USA

© 2003 Miller Electric Mfg. Co. 1/03